AGRI-INJECT

Because irrigation can deliver more than just water

Operating Manual

MacRoy D Series Fertigation Pump System

882-34-111025-0

882-34-111050-0

PLEASE CAREFULLY READ THESE OPERATING INSTRUCTIONS BEFORE USE. **DO NOT DISCARD.**

THE OPERATOR SHALL BE LIABLE FOR ANY DAMAGE CAUSED BY INSTALLATION OR OPERATING ERROR(S).

THE LATEST VERSION OF THE OPERATING INSTRUCTIONS AS WELL AS ANY ADDENDUMS AND/OR SUPPLEMENTAL INSTRUCTIONS ARE AVAILABLE AT **WWW.AGRI-INJECT.COM**.

AGRI-INJECT®

Because irrigation can deliver more than just water ®

Operating Manual

Fertigation System, MacRoy D

Fluid Injection System

Manual Part Number:	Man-882-002
Models in Manual:	882-34-111025-0, 882-34-111050-0 882-21-111025-0, 882-21-111050-0 882-12-111025-0, 882-12-111050-0
Revision Level:	B
Revision Date:	July 25, 2022

Please carefully read these operating instructions before use. Do NOT discard.
The operator shall be liable for any damage caused by installation or operating error(s).

The latest version of the operating instructions as well as any addendums and/or supplemental instructions are available at www.agri-inject.com.

1.0 TABLE OF CONTENTS

2.0 OPERATOR'S MANUAL ADVISORY

2.1 SUPPLEMENTARY INFORMATION

There may be additional instructions/information beyond this manual that are included with this manual AND/OR available on our website. Such instructions are very important and must be read prior to the installation or operation of this injection system.

2.2 TERMS & CONDITIONS

Agri-Inject® reserves the right to alter, correct, and/or improve the technical documentation and the products described in the technical documentation at its own discretion and without giving prior notice, insofar as this is reasonable for the user. The same applies to any technical changes that serve the purpose of technical progress.

The receipt of technical documentation does not constitute any further duty on the part of Agri-Inject® to furnish information concerning modifications to products and/or technical documentation. The user is responsible to verify the suitability and intended use of the products in your specific application, in particular with regard to observing applicable standards and regulations. All information made available in the technical data is supplied without any accompanying guarantee, whether expressly mentioned, implied, or tacitly assumed.

In general, the provisions of the current standard Terms and Conditions of Agri-Inject® apply exclusively, in particular as concerns any warranty liability.

Agri-Inject® reserves the right to register its own intellectual property rights for the product identifications of Agri-Inject® products that are used here. Registration of such intellectual property rights by third parties is prohibited.

Questions or Comments?
Please call us at 1-800-446-5328 (USA) or 1-970-848-5336 (International) or visit us on the web at www.agri-inject.com.

3.0 GENERAL SYSTEM ADVISORY

3.1 ABOUT THIS SYSTEM

You are now the owner of one of the most advanced crop management tools available today.

The Fertigation System you have purchased is designed to deliver precise amounts of liquid fertilizer or other chemicals into the water flowing through your irrigation system. The MacRoy D Fertigation System is a versatile tool. While MacRoy D Fertigation Systems are primarily designed to inject fertilizer, they are sometimes used to apply fumigants, acid products, certain biocides, and other medium application rate products.

When you invested in the MacRoy D Fertigation System, you acquired a complete injection system - everything you need to get started. Easy to install and simple to operate, your MacRoy D Fertigation System can be integrated into your center pivot, linear, greenhouse, or drip irrigation system with a minimum of work, tools, and effort.

The heart of your MacRoy D Fertigation System is the injection pump. This high quality pump is designed specifically to predictably, accurately, and reliably inject up to 50 gallons per hour of liquid, making MacRoy D Fertigation Systems a robust medium volume fertilizer injection system. The MacRoy D Fertigation System also features our patented Mister Mist'r® injection check valve. The Mister Mist'r® releases fertilizer or chemical in four directions in the middle of the irrigation pipe for complete mixing. The injected liquid is atomized into tiny droplets for complete suspension and homogenous distribution through your irrigation system. As a regulatorally approved check valve, the Mister Mist'r® protects against backflow of fertilizers or chemicals into the water supply, or leakage of water into the supply tank. In combination, the very reliable injection pump and the exclusive Mister Mist'r® assure accurate, uniform, safe distribution of fertilizers and other liquids to your crops.

Like all Agri-Inject® products, your MacRoy D Fertigation System is built with quality materials and designed to give you worry-free, low maintenance operation so you can fully benefit from the cost savings and production enhancements that fluid injection offers.

When properly installed and operated, your MacRoy D Fertigation System will give you many years of safe, dependable operation, providing greater management over your farm and putting dollars in your pocket along the way. This owner's manual is designed to help you get optimum performance and reliability from this quality fluid injection system.

If you have any questions about your MacRoy D Fertigation System or any other of our quality fluid injection systems, please contact your local Agri-Inject® dealer, visit us on our website at www.agri-inject.com or give us a call at 1-800-4-INJECT (800-446-5328).

Above all, thank you for your business. We are dedicated to helping growers like you around the world increase efficiency, optimize plant health, and foster environmental stewardship through the use of fluid injection technology.

3.2 IDENTITY CODE

Product Category: Fertigation System								
882	**Fertigation System** product line designation							
	-	Dash separator						
		Input Power Option						
		11	Single Phase 110V AC					
		12	Single Phase 220V AC					
		21	12V DC					
		32	Three Phase 230V AC					
		34	Three Phase 480V AC					
			-	Dash separator				
				Control Option				
				0	No control switch, no cord			
				1	One control switch			
				2	Power cord only, 12 ft (3.7m); no control switch			
				7	No switch; Reflex cord end; Reflex lower bracket			
					Plumbing Assembly Option			
					0	Suction hose barb only		
					1	Simplex Ball Valve and Strainer (BV&S)		
					2	Simplex BV&S with calibration tube port		
						Mister Mist'r Option		
						0	Discharge hose barb only	
						1	Yellow Ultra Mister Mist'r (Polypropylene)	
						2	Black Ultra Mister Mist'r (PVDF)	
						4	Alpha Mister Mist'r (316 SS)	
						5	Alpha Mister Mist'r (CPVC)	
							Pump Size	
							025	MacRoy D 25, 25 gallons per hour max
							050	MacRoy D 50, 50 gallons per hour max
882	-	**34**	-	**1**	**1**	**1**	**050**	**- 0**

Please provide the model code and serial number for your dealer to properly order spare parts or arrange for service on this system. This enables the unit definition and version to be clearly identified.

3.3 WARNING!

For your safety, the safety of others, and to prevent a risk of serious injury to yourself and others, before you install, use, or service an Agri-Inject® system:

READ THIS MANUAL!

This manual (and its addendums, including supplementary information) provides you with warnings, instructions for installation, use, and servicing safety practices. Read such information thoroughly before you install, use or service an Agri-Inject® system and follow all of the warnings and instructions it contains.

An Agri-Inject® system should be installed, used, or serviced ONLY by those who are thoroughly familiar with the instructions and warnings contained in this document. Improper use or disregard for warnings, instructions, and basic safety practices can create a risk of serious bodily injury to you or a bystander and/or property damage.

3.4 TRAINING

Do not install, operate, or service an Agri-Inject® system unless you have been properly trained to do so.

3.5 USE CAUTION! RESPECT PRESSURE LIMITATIONS!

The MacRoy D Series metering pump provided with your MacRoy D Fertigation System has output pressure limitations. MacRoy D pumps do not have internal pressure relief systems. The MacRoy D Series diaphragms are designed to absorb small, short duration pressure spikes; they are not designed to operate for any extended time at pressures exceeding their pressure rating.

If a MacRoy D pump is installed on an irrigation system with water pressure approaching or exceeding 100 psi, the pump diaphragm and/or the diaphragm seal may fail catastrophically. When the diaphragm or the diaphragm seal fails, the pump will squirt liquid out around the pump head in all directions with a very high force and for distances exceeding 20 feet presenting a very hazardous situation.

Pivots with large topographical changes, irrigation wells sited some distance from the irrigation system, and irrigation systems some elevation above the irrigation pump (e.g. a pivot on a bluff above a pump at the river below) are all examples of situations that often present water pressures far exceeding the pressure stated on the pivot nozzle chart. **If there is any question at all concerning irrigation water pressure, install an accurate pressure gauge at the point of injection to ensure safe operating pressure.**

MacRoy D Fertigation Systems have the following pressure limitations:

MacRoy D Fertigation System	Maximum Operating Pressure
D25	100 PSI (6.89 bar)
D50	100 PSI (6.89 bar)

3.6 TUBING AND PLUMBING

Always use proper tubing or plumbing when connecting an Agri-Inject® system. The working pressure rating, temperature rating, and chemical compatibility must be compatible with the pump output and the liquid being pumped. Agri-Inject® provides tubing and plumbing with its systems. However, they may not necessarily be proper for the particular use to which you put the system. Our support staff will be happy to assist with discussing application and compatibility issues.

3.7 INSPECTION

Always check to see that the system's fittings are tight and free of leaks.

3.8 IMPORTANT

Do NOT install, operate or service this system unless you have thoroughly read all warnings and instructions in the manual. **Do NOT** install, operate or service this system until you have been properly trained. **Always** use fittings and tubing that is properly rated and compatible with pump output and the pumped liquid. **Always** follow the specimen label of any chemical being injected by this system. **The label is the law**. **Always** check to see that fittings and tubing connections are tight and free of leaks. **Always** disconnect the electrical power cord before you disassemble or otherwise service this system. **Always** relieve the pressure and drain the suction lines before you disassemble or otherwise service this system. **Never** disconnect the discharge or suction lines while the pump is operating and/or the lines are under pressure.

3.9 DISASSEMBLY AND SERVICE

Always disconnect the electrical power cord before you disassemble or otherwise service this system. **Never** open the electrical components of the system without first disconnecting the electrical power cord and any other communication connections. **Never** disconnect discharge or suction lines from the system while the pump and/or lines are under pressure. **Never** disconnect discharge or suction lines from the system while the pump is operating. **Always** disconnect the electrical power cord, relieve the pressure in the discharge and/or suction lines, and drain the lines before disassembly or other service.

3.10 PUMPING DANGEROUS LIQUIDS

When the system is used to inject dangerous liquids, you face risks of harm to yourself and others from the dangerous liquids and/or the impact of those dangerous liquids. Personal injury and/or property damage can result from contact with the dangerous liquids from spray, splash, fumes, or vapors. Damage can also result from the impact of the misapplication of such dangerous liquids.

If the system is used to pump dangerous liquids, in addition to heeding the warnings already set forth, you must also:

- Always avoid bodily contact with dangerous liquids. Use the Personal Protective Equipment (PPE) recommended in the SDS, Specimen Label, or other data provided by the dangerous liquid supplier/manufacturer.
- Take great caution to ensure dangerous liquids do not cause damage to local property or equipment.
- Always heed the warnings, follow the instructions, and take whatever precautions the supplier of the dangerous liquid has provided you.
- Never operate the pump if the fittings or tubing connections are not tight and/or free from leaks.
- Always drain the discharge line before disassembly.
- Always fully drain and flush the supply tank with water before adding another chemical.
- Always flush the pump with water after injecting a dangerous liquid and before adding another to avoid a potentially hazardous chemical reaction.
- Consider installing a supplementary back pressure valve in the discharge line between the discharge check valve and the injection check valve. See **Section 12.0 INSTALLATION AND PIPING APPENDIX**.

3.11 DEFINITIONS

The following terms are used in this manual and in the context of this scope of work, the following definitions should be applied.

Term	Meaning
Bleeder Valve	The valve assembly commonly provided with Mister Mist'r® Injection Check Valves that allows for the bleeding of air from the discharge plumbing on startup and for relieving line pressure after shut down.
Calibration	The process of ensuring an injection pump discharges the proper amount of liquid per unit of time, e.g., gallons per minute.
Calibration Tube	A calibrated tube that may be purchased for use with a MacRoy D Fertigation System that is used to measure injection volume over time.
Carrier	A liquid in which feed chemicals are mixed. Examples include water and crop oil.
Fertigation	The application of fertilizers or other higher application rate chemicals to a crop through injection through the irrigation system
Feed Chemical	The fertilizer or chemical being injected.
Injection Quill	A device at the end of the discharge line from the pump that connects to the irrigation pipe and distributes feed chemicals into the irrigation water. Nearly all regulations call for the injection quill to have a spring-loaded check valve integrated into the quill. In this case, it can also be called an injection check valve. The Agri-Inject® provided injection quill is the Mister Mist'r®.
Jar Test	A method of testing the compatibility and suitability of a mixture of chemicals and carrier prior to mixing them in the tank.
Liquid End	The head, diaphragm, and check valves of a pump, i.e., the part of the pump that 'pumps the liquid'
Percent Knob	The knob on the right side of a MacRoy DPump. This knob adjusts the pump stroke length and is calibrated in percent. Pump output is the maximum rated gallons per hour of the pump multiplied by the percent setting of the percent knob.
Liquid Supply Tank	The tank or vessel provided by the user for the temporary storage of the fertilizer or chemical injected by the MacRoy D Fertigation System. Typically over 1000 gallons, supply tanks are sometimes portable, but are often permanently installed.
Mister Mist'r®	The patented injection check valve provided by Agri-Inject® for use on Agri-Inject® fertilizer and chemical injection systems. (see Injection Quill above)
Specimen Label	The label provided with all approved agricultural feed chemicals

4.0 SAFETY

4.1 IDENTIFICATION OF SAFETY NOTES

The following signal words are used in these operating instructions to denote different severities of danger:

Signal Word	Meaning
WARNING	Denotes a possibly dangerous situation. If this is disregarded, you are in a life threatening situation and this can result in serious injuries
CAUTION	Denotes a possibly dangerous situation. If this is disregarded, it could result in slight or minor injuries or material damage.
DANGER	Denotes a possibly dangerous situation. If this is disregarded, a situation may exist that will present dangers of injury to personnel or severe damage to equipment or the environment.

4.2 WARNING SIGNS DENOTING DIFFERENT TYPES OF DANGER

The following signal words are used in these operating instructions to denote different severities of danger:

Warning Signs	Type of danger
	**Warning - Automatic Start-Up**
	**Warning - High-Voltage**
	**Warning - Danger Zone**

4.3 INTENDED USE

Only use this system to meter and inject liquid feed chemicals. Only use this system to inject chemicals that are below the maximum viscosity supported by the pump. Only use the system after it has been correctly installed and started up in accordance with the technical data and specifications contained in the operating instructions. Observe the general limitations with regard to viscosity limit, chemical resistance, and density. A chemical resistance chart is available at www.agri-inject.com. All other uses or modifications are prohibited. The injection pump is not intended for the metering of gaseous media or solids. The injection pump is not intended for the metering of flammable or explosive media. The system is not intended for operation in areas at risk from explosion. The system should only be operated by trained and authorized personnel. See **Section 4.6 QUALIFICATION OF PERSONNEL**. You are obliged to observe the information contained in the operating instructions at the different phases of the unit's service life

4.4 SAFETY INFORMATION

WARNING!
Warning about personal and material damage
The injection system can start to pump as soon as it is connected to the main voltage OR at such a time that the irrigation system starts up. Ensure that the control switches are set to the OFF positions before servicing the machine.

WARNING!
Danger of electric shock
Main voltage exists in the switch enclosure and in the pump wiring box. When handling this system or making any wiring connections, disconnect the main power. If there is damage to any of these components, disconnect it from the main power immediately and only return to service after an authorized repair has been made.

WARNING!
Warning of a dangerous or unknown feed chemical leak
Should a dangerous or unknown feed chemical be used, it may escape from the wetted fittings/tubing when working on the system. Take appropriate measures before working on the system (e.g. proper PPE, consult label or SDS of the chemical). Drain and flush all the plumbing before working on the system

WARNING!
Danger from hazardous substances
Possible consequence: Fatal or very serious injury
Please ensure that when handling hazardous substances that you have read the latest safety data sheets provided by the manufacturer of the hazardous substance. The actions required are described in the Safety Data Sheet (SDS). Check the SDS regularly and replace, if necessary, as the hazard potential of a substance can be re-evaluated at any time based on new findings. The system operator is responsible for ensuring these SDS sheets are kept up to date, as well as for producing an associated hazard assessment for the work areas affected.

WARNING!
Danger to environment and personnel due to improper chemical disposal
The operator should follow all rules and regulations from local, regional and federal agencies as well as any directives from the feed chemical label concerning proper disposal of excess chemical and used chemical containers.

WARNING!
Always follow the chemical label
The system operator should always consult the specimen label of the chemical being pumped before making the application. Ensure that the target crop, target pest, application rate, and application method are all in compliance with the label prior to injecting said chemical. The label is the law! Fines and punishment could result from off-label application

WARNING!
Warning of feed chemical spray during disconnection
Feed chemicals can spray out of the discharge hose if they are manipulated or opened due to pressure in the pump head and adjacent parts of the system. Disconnect the pump from the main power supply and ensure it cannot be switched on again by unauthorized personnel. Depressurize the system before commencing any work on wetted parts.

WARNING!
Warning of feed chemical spray due to piping blockage
The metering pump can generate extreme pressure. Discharge fittings/tubing can rupture if the discharge line is blocked. Ensure that the hose and injection check valve (Mister Mist'r®) is clear before pumping.
Ensure that the suction filter is clean and the filter element is installed properly and in good shape before pumping.

WARNING!
Warning of feed chemical spray due to material compatibility
An unsuitable feed chemical can damage the wetted parts of the system.
Take into account the resistance of the wetted materials when selecting the chemical to be pumped. Visit www.agri-inject.com for a chemical resistance chart.

CAUTION!
Danger of injury to personnel and material damage
The use of untested, non-conforming, third-party components can result in injury to personnel and material damage. Only fit parts to this system that have been tested and approved by Agri-Inject®.

CAUTION!
Danger from incorrect operation or poor maintenance
Danger can arise from this system due to incorrect operation and poor maintenance. Ensure operators are familiar with this manual and have access to SDS and specimen labels. Adhere to good maintenance practices.

CAUTION!
Warning against illegal operation
Observe the regulations (local, state, federal) that apply where the system is installed.

CAUTION!
Lifting Hazard
System is heavy. Single person lift could cause injury. When necessary, use assistance when moving or lifting.

DANGER!
Danger of property and/or equipment damage
The use of feed chemicals and/or feed chemical mixtures which are too viscous, laden with particles, or otherwise not suitable for mixing and/or pumping can cause damage to the pumping system. Always follow feed chemical specimen label recommendations for pumping and mixing AND follow the limitations set forth in this operator's manual.

DANGER!
Danger of environmental damage or contamination
The use of this system without the recommended and proper backflow, check valve, and control interlock provisions can result in improper operation of the equipment resulting in unintended contamination of water supplies. Always follow local, state, and federal laws, codes, and regulations; specimen label recommendations; and operator's manual recommendations for proper installation and operation of fluid injection equipment.

WARNING!
Only return systems for repair in a cleaned state and with flushed discharge and suction plumbing
Ensure systems are cleaned thoroughly, flushed multiple times with water, and fully drained prior to sending or delivering the system to a service location. This protects the transportation company as well as the service provider from dangerous or hazardous chemicals.

CAUTION!
Danger of material damage
This system can be damaged by incorrect or improper storage or transportation. The system should only be stored or transported in a well packaged state. The packaged system should also only be stored or transported in accordance with the stipulated storage conditions. The packaged system should be protected from moisture and the ingress of chemicals.

4.5 INFORMATION IN THE EVENT OF AN EMERGENCY

In an emergency, disconnect the main power, turn the system switch to OFF, or disconnect the main power supplying power to the injection system.

If feed chemical escapes or is spilled, ensure that the pressure on the discharge side of the pump is relieved, all tank valves are closed, and adhere to the chemical Safety Data Sheet (SDS) for proper cleanup and disposal.

For chemical poisoning, call 911 if the person is unconscious, has trouble breathing, has convulsions, or is otherwise showing life threatening signs. Otherwise, call Poison Control at 1-800-222-1222.

For chemical spills, CHEMTREC provides access to technical experts on chemical products and hazardous materials and maintains a large database of Safety Data Sheets (SDS). CHEMTREC can be reached at 1-800-262-8200.

4.6 QUALIFICATION OF PERSONNEL

Task	Qualification
Storage, transport, unpacking	Instructed person
Assembly	Technical personnel, service
Planning the installation	Qualified personnel who have a thorough knowledge of metering pumps and injection systems
Installation	Technical personnel, service
Installation, electrical	Electrical technician
Operation	Instructed person
Maintenance, repair	Technical personnel, service
Decommissioning, disposal	Technical personnel, service
Troubleshooting	Technical personnel, electrical service, instructed person, service

Explanation of the table:

Qualified Personnel
A qualified person is deemed to be a person who is able to assess the tasks assigned to him and recognize possible dangers based on his/her technical training, knowledge and experience, as well as knowledge of pertinent regulations. A qualification of equal validity can also be gained by several years of employment/experience in the relevant field of work.

Electrical technician
An electrical technician is able to complete work on electrical systems and recognize and avoid possible dangers independently based on his/her technical training and experience, as well as knowledge of pertinent standards and regulations.
The electrical technician should be specifically trained for the working environment in which he/she is employed and know the relevant standards and regulations.
An electrical technician must comply with the provisions of the applicable statutory directives on accident protection.
IN NO WAY does an electrical technician substitute for a Licensed Electrician and should NOT perform any function that must/should legally be performed by a Licensed Electrician.

Instructed person
An instructed person is deemed to be a person who has been instructed and, if required, trained in the tasks assigned to him/her and possible dangers that could result from improper actions, as well as having been instructed in the required protective equipment and protective measures.

Service
The service designation refers to service technicians who have received proven training and have been authorized by Agri-Inject® to work on the system.

5.0 STORAGE, TRANSPORT AND UNPACKING

5.1 SAFETY INFORMATION

	CAUTION! **Danger of material damage** This system can be damaged by incorrect or improper storage or transportation. The system should only be stored or transported in a well packaged state. The packaged system should also only be stored or transported in accordance with the stipulated storage conditions. The packaged system should be protected from moisture and the ingress of chemicals.
	CAUTION! **Lifting Hazard** System is heavy. Single person lift could cause injury. When necessary, use assistance when moving or lifting.
	WARNING! **Only return systems for repair in a cleaned state and with flushed discharge and suction plumbing** Ensure systems are cleaned thoroughly, flushed multiple times with water, and fully drained prior to sending or delivering the system to a service location. This protects the transportation company as well as the service provider from dangerous or hazardous chemicals.

5.2 UNPACKING

Compare the packing list with the delivered system. The system should be equipped with a startup kit. Ensure that there is no damage to the system as a result of freight transportation. Report any damage immediately to the freight company. Properly dispose of all packing materials.

5.3 STORAGE

Storage should be indoors in a clean, dry, protected area free from rodents and excessive insects. If the storage area is susceptible to freezing conditions, ensure that the system has been properly winterized by pumping a safe antifreeze solution through the system. Agri-Inject® recommends windshield washing solvent with a minus 20 degree fahrenheit (or colder) rating.

5.4 TRANSPORTATION

Ensure the system is tied down and secured during transportation. Extreme bumps and sliding around may damage suction and discharge plumbing components. Never lift the system by grabbing suction plumbing components.

6.0 PRE-INSTALLATION

6.1 PROTECTIVE CLOTHING

WARNING!
Warning of a dangerous or unknown feed chemical
Should a dangerous or unknown feed chemical be used, it may escape from the wetted fittings/tubing when working on the system. Take appropriate measures before working on the system (e.g. proper PPE, consult label or SDS of the chemical). Drain and flush all the plumbing before working on the system

Always wear the proper Personal Protective Equipment (PPE) when working on or near this MacRoy D Fertigation System. PPE can include the following:

PPE Category	Typical PPE Items
Eye and Face Protection	Goggles with side shields Face shield
Hand Protection	Gloves (hand) Gloves (lower arm)
Body Protection	Protective suit Shoe/boot covers
Respiratory	Face mask Respirator

Precautions should be taken dependent on the chemical being used. You should ALWAYS consult the Safety Data Sheet (SDS) of the chemical being used to determine the type of PPE to be used.

Refer to the following chart to order safety supplies. Consult your local Agri-Inject® dealer/distributor for pricing.

Description	Quantity	Part Number
Latex Gloves	1 box (144 gloves)	419-15-000000-0
Protective Suit	1	419-15-000001-0
Boot Covers	1	419-15-000002-0
Safety Glasses	1	419-15-000003-0
Face Guard	1	419-15-000004-0

6.2 TEST FLUIDS

All MacRoy D Fertigation Systems are fully tested before leaving the factory. Agri-Inject® uses windshield washing solvent when testing and some of this liquid is normally present within the suction fittings and pump head assembly. If the intended feed chemical is not compatible with this solvent, flush the system with water and turn on the pump briefly to clear the liquid from the pump head prior to filling the system with feed chemical.

6.3 TUBING CONNECTIONS

Suction and discharge tubing or pipe sizes must not be reduced. Make certain that all tubing/hose is securely fastened and tight prior to startup. Always use Agri-Inject® supplied tubing with your MacRoy D Fertigation System, as these supplies are designed for maximum compatibility with the system operation.

Refer to the following table to order replacement tubing and hose kits. Consult your local dealer for pricing.

Description	Quantity	Part Number
Discharge hose kit, Black Braided PVC 1/2" X 3/8" 12 FT (for D25 and D50)	1	849-07-016012-0
Bleeder valve tubing, 3/16”	1	260-02-250150-0

6.4 ELECTRICAL CONNECTIONS

All wiring diagrams should be consulted and followed to reduce the risk of electrical shock. It is strongly recommended that the electrical installation be performed, supervised, or approved by a Licensed Electrician. See **Section 7.6.1 WIRE COLOR AND PHASING**.

6.5 PLUMBING CONNECTIONS

Always adhere to your local plumbing codes as well as regional and national regulations for chemical injection. Agri-Inject® is not responsible for improper installation. Copies of state and local regulations can be found at www.agri-inject.com. It is the responsibility of the user, however, to ensure that the installation is in compliance with the most current code. Agri-Inject® makes no guarantee that such posted regulations are entirely up to date.

6.6 AGRICULTURAL APPLICATIONS

Always follow guidelines for chemigation as defined in federal, state and local regulations. Almost all states have defined chemigation and fertigation rules and regulations. Many States require annual inspections of any facility where chemigation or fertigation are practiced. There may be severe penalties enforced for not following a particular state's rules and regulations.

While the details of particular state regulations vary somewhat from state to state, there are three components to every chemigation of fertigation facility that must always be installed and properly functioning:

1. Backflow prevention valve. Backflow prevention valves prevent irrigation water from flowing backwards (e.g. from a pivot back into the groundwater) in the event of irrigation pump shut down or failure. In the case of chemigation or fertigation this is especially important as the treated irrigation water would contaminate the groundwater

2. Injection check valve. Injection check valves provide two very important functions. First, the injection check valve prevents chemicals from entering the irrigation water unless the chemical is being pumped. The check valves on most positive displacement metering pumps are not spring loaded. They will typically allow liquid to flow freely through the pump by gravity means alone. Without an injection check valve, chemical can continue to flow into the irrigation water pipe after the irrigation event has stopped creating a very hazardous concentration of chemical in the pipe. Second, the injection check valve prevents water from flowing backward through the injection system in the event of injection pump failure. Backflow of water could flood the supply tank creating a hazardous material spill. The Agri-Inject Mister Mist'r® is a regulatorally approved injection check valve.

3. Positive interlock. Injection systems must be positively interlocked to the irrigation system. In most cases, the interlock can either be electrical or logical. The interlock interrupts the electrical power to the injection when irrigation stops for any reason. Typically this interlock is provided by a water pressure activated "Chem Switch" circuit in a pivot panel or a contactor actuated by the same circuit that activates the irrigation water pump motor.

See the following Figures 1-4 depicting the importance of these three safety devices:

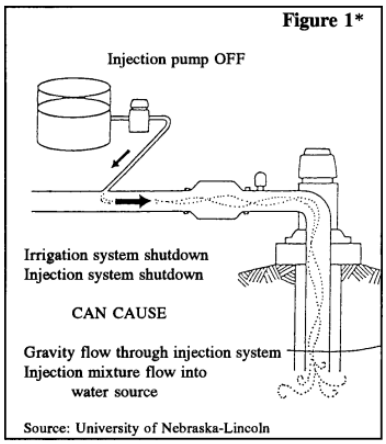

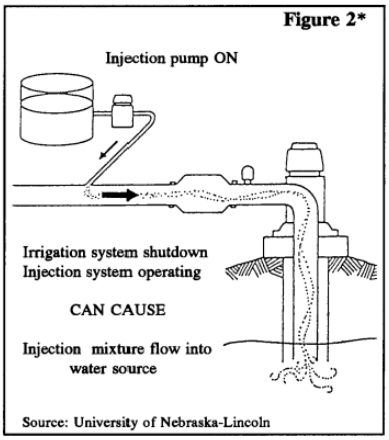

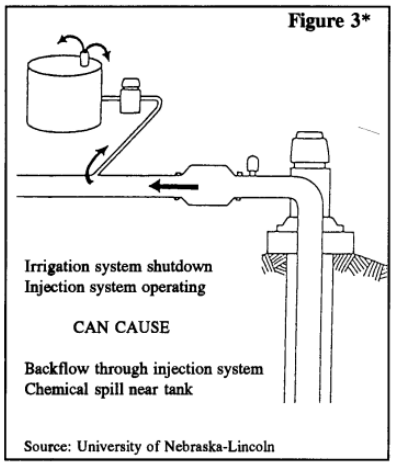

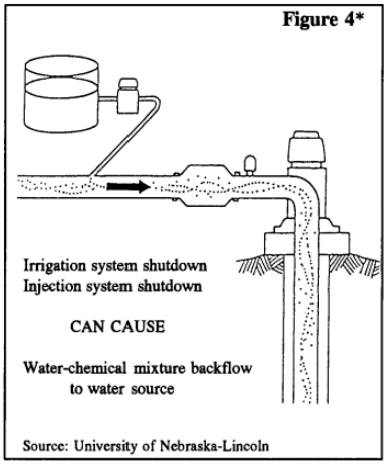

In addition to state rules and regulations, always follow the rules for application as defined on the chemical specimen label. The chemical specimen label is approved by the United States EPA, so it may include federal regulations that override state rules. The chemical specimen label very likely includes additional rules and regulations that apply specifically to the chemical being injected. Remember: THE LABEL IS THE LAW. When necessary, post warning signs to alert people about treated water and re-entry restrictions.

Refer to the following chart for more information or supplies. Consult your local dealer for pricing.

Description	Quantity	Part Number
Danger sign with post	1	419-15-000005-0
Complete Chemigation manual	1	Bulletin 1031
Chemigation Q&A Guide	1	Bulletin 1050
Approved chemical for Chemigation list	1	Call for assistance

Economic Payback Guide	1	Bulletin 1034

6.7 OTHER APPLICATIONS

Consult local, municipal, state, provincial, and federal laws, regulations, and codes and always conform to standards for chemical injection. Make sure there are functioning backflow prevention devices, injection check valves, system interlocks, and back pressure valves consistent with regulations and industry best practices.

Always follow chemical labels and consult Safety Data Sheets (SDS) for additional information about the feed chemical.

6.8 CHEMICAL DISPOSAL

WARNING!
Danger to environment and personnel due to improper chemical disposal
The operator should follow all rules and regulations from local, regional and federal agencies as well as any directives from the feed chemical label concerning proper disposal of excess chemical and used chemical containers.

Please consult your local chemical representative for suggested disposal of excess feed chemicals as well as chemical containers in order to be compliant with laws and regulations and to assure environmental safety.

6.9 MIXING CHEMICALS

WARNING!
Danger from hazardous substances
Possible consequence: Fatal or very serious injury
Please ensure that when handling hazardous substances that you have read the latest safety data sheets provided by the manufacturer of the hazardous substance. The actions required are described in the Safety Data Sheet (SDS). Check the SDS regularly and replace, if necessary, as the hazard potential of a substance can be re-evaluated at any time based on new findings. The system operator is responsible for ensuring these SDS sheets are kept up to date, as well as for producing an associated hazard assessment for the work areas affected.

WARNING!
Danger to environment and personnel due to improper chemical disposal
The operator should follow all rules and regulations from local, regional and federal agencies as well as any directives from the feed chemical label concerning proper disposal of excess chemical and used chemical containers.

Important!
Many chemicals, carriers, adjuvants, and other liquids do not combine well and may form mixtures that will not pump adequately. It is highly recommended that the following “jar test” be performed with the planned chemicals before taking the system and chemicals to the field.

There are times when it may be necessary or preferred to mix feed chemicals with water, a carrier, a synergistic additive or even another chemical. Mixing chemicals is a process that must be performed with great care. Read product labels and follow directions for all products that you mix. Agri-Inject® recommends that a small scale “jar test” be done to test for compatibility prior to tank mixing in the field. Instructions for the jar test are as follows:

1. Place the carrier (water, liquid fertilizer, crop oil, etc) into a quart jar.
2. Add each pesticide (or other active feed chemical) into the carrier one at a time.
    a. The amount of feed chemical added should be at the same proportion to the carrier as it will be used in the actual tank mix.
3. Close the lid tightly and shake well with each addition.
4. Invert the jar ten times, then allow the mixture to sit quietly for 30 minutes.
5. Inspect the mixture.
    a. If a uniform mixture cannot be made, or if non-dispersible oil, sludge, or clumps of solids form, the mixture is incompatible and should not be used.
    b. If the jar test shows minor separation after 30 minutes, without sludge or clumps, which re-mixes readily with ten jar inversions, it is tolerable for use with an MacRoy D Fertigation System as long as the supply tank is equipped with a mixer.
    c. If the jar test shows separation, it is recommended that the agitation remain on at all times until the mixture is completely used. DO NOT allow the mixture to stand overnight or for any significant length of time without agitation.
    d. If the jar test shows no visible separation or coagulation, continuous mixing is usually not necessary. In fact, some mixtures perform very poorly during over-agitation.
6. Dispose of the mixture properly or add it to the tank mix.

7.0 INSTALLATION

7.1 SAFETY

	CAUTION! **Lifting Hazard** System is heavy. Single person lift could cause injury. When necessary, use assistance when moving or lifting.
	DANGER! **Danger of environmental damage or contamination** The use of this system without the recommended and proper backflow, check valve, and control interlock provisions can result in improper operation of the equipment resulting in unintended contamination of water supplies. Always follow local, state, and federal laws, codes, and regulations; specimen label recommendations; and operator's manual recommendations for proper installation and operation of fluid injection equipment.
	WARNING! **Warning about personal and material damage** The injection system can start to pump and mix as soon as it is connected to the main voltage OR at such a time that the irrigation system starts up. Ensure that the control switches are set to the OFF positions before servicing the machine.
	WARNING! **Danger of electric shock** Main voltage exists in the switch enclosure and in the pump wiring box. When handling this system or making any wiring connections, disconnect the main power. If there is damage to any of these components, disconnect it from the main power immediately and only return to service after an authorized repair has been made.
	DANGER! **Danger of environmental damage or contamination** The use of this system without the recommended and proper backflow, check valve, and control interlock provisions can result in improper operation of the equipment resulting in unintended contamination of water supplies. Always follow local, state, and federal laws, codes, and regulations; specimen label recommendations; and operator's manual recommendations for proper installation and operation of fluid injection equipment.

7.2 LIQUID SUPPLY TANK

Select a liquid supply tank carefully. Consider all of the liquids that may be injected, and choose a tank material that will be compatible with all of the potential liquids. Polyethylene tanks are commonly used and suitable for most, but not all, liquids. Be sure the tank is not too tall to fit under the pivot trusses at the location where the tank will be sited. See **7.3 SYSTEM LOCATION** below. Select a tank that is large enough for at least one complete application. It is often not practical to drive a fertilizer supply truck across a field that is being irrigated.

Field Acres X Maximum Gallons per Acre = Maximum Application Gallons

Select a tank large enough for Maximum Application Gallons plus at least 100 gallons extra.

Be sure the tank is well vented and has a practical means of filling. Sometimes tanks are too tall to be easily filled through the vented lid without a step ladder. A fill port with a shut off valve and cam-lock fittings may be more practical.

Equip the tank with discharge plumbing that includes a shut off valve and a strainer. The tank discharge plumbing needs to be sized at least as big as the injection system suction hose. See **7.5 SUCTION PLUMBING** below.

7.3 SYSTEM LOCATION

Locate the system in an area convenient to pipeline plumbing and electrical connections. The MacRoy D Fertigation System should be placed on a hard, flat, level surface (such as packed dirt or gravel, or concrete). The location should be elevated to protect the system from sitting in or being immersed in water. The location should be easily accessible by the operator for liquid delivery, operation, calibration, service, and maintenance. Typical locations are either the center of a center pivot or the irrigation well or pump. Many growers will select the well or pump location as it may mean fewer wheel tracks to cross with heavy fertilizer trucks.

The following table shows the standard hose and wire lengths to assist in determining proper location:

Description	Length
Discharge hose	12 ft.
Incoming power cord	15 ft.

The system is designed as a totally enclosed system suitable for outdoor use. In cases of extreme environmental conditions, steps should be taken to protect the system. Conditions with continuous sunshine exposure and ambient temperatures above 90°F should be avoided if possible. Good installation practice would call for an open-sided sun shade over the top of the system.

7.4 DISCHARGE PLUMBING CONNECTIONS

WARNING!
Warning of feed chemical spray due to high pressure fluid leak
There is a possibility of the head bolts on a MacRoy D working loose during transport. Loose head bolts may allow the spray of high pressure liquid around the head of the pump. Check the torque of the head bolts before the first use, after one week of use, and at least annually thereafter..

Note: Follow all local, state, and federal laws concerning backflow and check valve requirements for fluid injection into irrigation systems.

The system injects into the irrigation pipeline by means of an injection check valve known as a Mister Mist'r®. This valve is nearly always required by law. A 3/4" FNPT full clearance port must be present in the pipeline for proper connection. This port MUST be downstream from the backflow valve. It must be installed far enough away from the backflow valve so as to not interfere with the backflow valve's mechanical function. It must be installed at least three feet upstream of the nearest irrigation output, such as a sprinkler nozzle or drip emitter.

On a center pivot sprinkler system, there are usually many choices for a location to install the injection check valve. One location that is preferred is a point about halfway up on the center pivot riser pipe. This point is always a satisfactory distance upstream of the backflow valve as well as any sensing devices such as flow or pressure sensors that may be negatively impacted by injected

feed chemicals. It is an acceptable distance from the nearest sprinkler outlet. It is downstream from and above the lower elbow, which tends to help break up ice and other larger objects that may be in the pipe during spring start-up and could cause damage to the quill. Finally, it may be above the tank level and this helps prevent siphoning should the injection quill ever break or fail; it also helps bleed air from the discharge line during system start-up. See **Figure 1** for location.

Figure 1

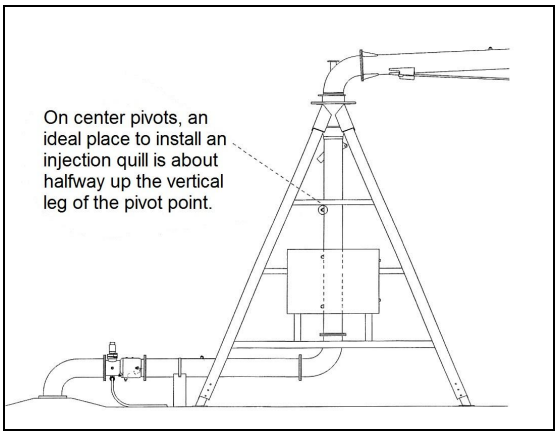

If no port is present, Agri-Inject® recommends that a 3/4" FNPT stainless steel half coupling be welded into the pipeline. In the case of plastic piping, a 3/4" FNPT saddle is recommended.

Refer to the following chart to order half couplings and other items. Consult your local dealer for pricing.

Description	Quantity	Part Number
Half coupling, ¾" SS	1	111-50-020020-0
Welding rod, SS	1	430-50-000000-0
Backflow valves and parts		Many items available. Consult your dealer for different options.

Once the half coupling is in place, apply thread sealant to the ¾" MNPT threads of the Mister Mist'r® and tighten into the half coupling. Agri-Inject® recommends a generous application of Teflon tape for Mister Mist'r® threads.

Helpful Tip: Agri-Inject® recommends removing Mister Mist'r® injection check valves at the end of every irrigation season when draining the pivot. Leave the Mister Mist'r® out of the pipe over the winter and reinstall with new Teflon tape for maximum Mister Mist'r® service life.

Refer to the following chart to order thread sealant. Consult your local dealer for pricing.

Description	Quantity	Part Number
Rectorseal, ½ pint container	1	401-02-000005-0
Teflon tape, ½" x 520"	1	401-03-008520-0

Please refer to Section 12.0 INSTALLATION AND PIPING APPENDIX for a more thorough discussion of suction and discharge piping considerations.

7.5 SUCTION PLUMBING CONNECTIONS

MacRoy D Fertigation Systems require large diameter suction hoses. Due to the reciprocating operation of positive displacement pumps, the peak flow in a suction stroke is approximately 3.5 times greater than the rated flow of the pump. Too small diameter of suction hose will cause friction losses resulting in a reduction of pump discharge. The longer the suction hose, the larger the diameter needs to be. At a minimum, the suction hose should always be at least as big as the suction barb fitting provided with the pump. Use the following table to determine the proper size of suction hose:

Pump	5’ Hose	10’ Hose	15’ Hose	20’ Hose	25’ Hose
D25	3/4“ ID	1” ID	1” ID	1-1/4” ID	1-1/4” ID
D50	3/4“ ID	1” ID	1-1/4” ID	1-1/4” ID	1-1/2” ID

Your MacRoy D Fertigation System will work best and prime easiest with flooded suction. Ensure that the liquid level in the supply tank is at least as high as the head of the pump, preferably as high as the Mister Mist’r® injection check valve.

Try to keep suction hose as short and straight as practical. Running a hose up and over an obstacle may make the pump difficult to prime. A bubble in a high spot in a suction hose does not usually create a problem. It is typically not necessary to bleed bubbles out of suction hoses.

Large fertilizer tanks have a history of accumulating debris and sediments. It is considered good practice to install a large strainer with a coarse screen at the tank outlet to prevent frequent clogging of the smaller filter screen provided with your MacRoy D Fertigation System. Clean both filter screens regularly to prevent blockages in the middle of fertigation events.

Helpful tip: Suction plumbing leaks are a common problem causing injection pumps to under-pump or stop pumping altogether. It is very possible to have a suction leak large enough to suck air, but too small to drip liquid. If a hose can be twisted on a barb fitting, it is too loose. A suction hose that has been installed for over a year may have taken a set to the barb fitting and be difficult to seal. Cut the ends off of suction hoses at the beginning of every season to start with hose that has not set to the barb. It is good practice to use two hose clamps in opposite directions, especially on larger barb fittings and hoses.

Please refer to Section 12.0 INSTALLATION AND PIPING APPENDIX for a more thorough discussion of suction and discharge piping considerations.

7.6 ELECTRICAL CONNECTIONS

WARNING!
Danger of electric shock
Main voltage exists in the switch enclosure and the pump motor wiring box. When handling this system or making any wiring connections, disconnect the main power. If there is damage to any of these components, disconnect it from the main power immediately and only return to service after an authorized repair has been made.

Note: Follow all local, state, and federal laws concerning electrical or logical interlocking requirements for fluid injection into irrigation systems. Fertigation systems should always be interlocked to prevent the injection pump from running when the irrigation system is not operating.

The MacRoy D Fertigation System can be configured to work with several different power sources, for example:

- 110VAC single phase
- 220VAC single phase
- 480VAC single phase
- 240VAC three phase
- 480VAC three phase
- 575VAC three phase
- 12VDC

The most common configuration is 480VAC three phase, and this manual will cover the details of that configuration. If this system has been manufactured to work with a different electrical supply, there may be a supplementary addition to this manual specific to that configuration; or visit our website at www.agri-inject.com.

In many countries, the provided AC electrical frequency is 50 Hz, rather than the United States' standard 60 Hz. MacRoy D Fertigation Systems with 1/4 Hp three phase motors are not rated for 50 Hz. service. If you have a need to use a MacRoy D Fertigation System in 50 Hz. service, please contact Agri-Inject for assistance.

MacRoy D Fertigation System pumps in 12VDC service will vary somewhat in output compared to the same pump in AC service. The 12VDC power is typically provided by an engine driven alternator. The DC voltage provided by engine driven alternators is known to vary, sometimes significantly, from engine to engine. Almost all alternators provide far more than 12VDC--usually 13.5 to 14 volts. As DC motor rpm varies with voltage, the pump output will vary as well.

The system comes with the supply power wire pre-stripped for connection to a rated plug connector OR direct into a control panel. It is highly recommended that the power supply for the injection system be isolated and independently fused according to the table below. We recommend using time-delay, slow acting fuses rated properly for both voltage and current such as an FNQ Class CC.

System	Full Load Amps
MacRoy D Series, 480 VAC 3ph	0.7 A
MacRoy D Series, 240 VAC 3ph	1.4 A
MacRoy D Series, 110 VAC 1ph	5 A
MacRoy D Series, 220 VAC 1ph	2.5 A
MacRoy D Series, 12 VDC	21 A

Typically, the operator will install a plug onto the wire to connect to a corresponding receptacle at the irrigation system control panel or the well or pump control panel. Pivot control panels often include a “Chem Switch” circuit specifically for this purpose. We recommend adhering to the following 480 volt AC three phase plug and receptacle specifications for code compliance and safety.

480 Volt 3 Phase Electrical Plug and Connector Specifications
Industrial grade, locking devices
NEMA L16-30, 30A, 3∅ 480V/AC, 3P-4W
Thermoplastic and/or elastomeric construction
Brass contacts
Grommet size appropriate for 16/4 SO cord
Water-tight rating optional based on environmental and installation conditions

There are a large variety of appropriate single phase 120V and 220V plug and receptacle combinations. 12 Volt DC systems are typically hooked up with ring lug terminals or alligator clips, depending on the application. Agri-Inject® highly recommends consulting with a local Licensed Electrician to ensure complete compliance.

Before connecting the plug to the main power, ensure that the pump control switch is in the OFF position.

7.6.1 WIRE COLOR AND PHASING

It is recommended to specifically connect 3 phase system power wires to main power phases according to the diagram in **Figure 2**. Prior to connection, it is important to verify with a voltmeter that there is 480VAC from line to line (1-2, 1-3, 2-3) and NO voltage present on the ground lug (ground to isolated earth).

Figure 2

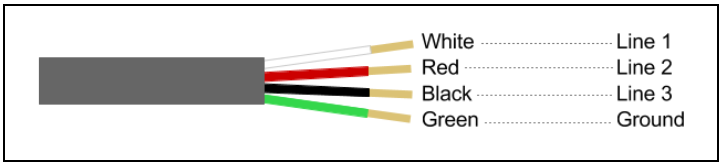

7.6.2 MOTOR ROTATION

The pump is designed to run in CLOCKWISE rotation when looking down on the pump motor. A decal is present on the motor as a reminder. See **Figure 3**. After connecting power according to the schematic in **Figure 2**, confirm the rotation of the pump motor by engaging the control switch on and off quickly while watching the fan rotation on the pump motor. If the direction of the motor rotation is clockwise, the wiring for that installation is properly 'phased'. If the direction is counterclockwise, two line connections must be switched to reverse the rotation. Typically, swapping the wire connections (ie. L1 and L3) in the electrical plug is the easiest and most appropriate.

OPERATING MACROY D SERIES PUMPS IN THE WRONG DIRECTION WILL VERY QUICKLY DESTROY THE PUMP DRIVE GEARS. OPERATING THE PUMP IN THE WRONG DIRECTION IS NOT COVERED UNDER WARRANTY.

Important!
If the MacRoy D Fertigation System is used at multiple irrigation systems, it will be necessary to confirm motor rotation (and adjust wiring as necessary) at every site.

Figure 3

7.6.3 ROTARY PHASE GENERATOR POWER SUPPLY

If three phase power for the irrigation system is being supplied by a Rotary Phase Generator, there are special considerations for using the MacRoy D Fertigation System.

Rotary phase generators generate the third phase of three phase power when single phase is supplied by the utility. In the irrigation industry, rotary phase generators are typically sized for the entire potential 'load' of the system plus a small safety factor. In the case of center pivots, the irrigation system is usually running at far below the rated maximum load. As a result, the Rotary Phase Generator is often producing more power than what is being consumed. This results in the third phase, or the 'generated' leg, of power having high and/or variable voltage levels relative to ground and the other two legs. Thus, this third leg has been dubbed in the industry as the 'wild leg'.

Electric motors that run continuously on rotary phase generated 3 phase electricity with high voltage generated legs are prone to early failure. The recommended solution is to use a higher horsepower inverter duty rated motor. Consult with Agri-Inject® before installing a MacRoy D pump in rotary phase generator service.

8.0 OPERATION

8.1 SAFETY

WARNING!
Warning about personal and material damage
The injection system can start to pump as soon as it is connected to the main voltage OR at such a time that the irrigation system starts up. Ensure that the control switches are set to the OFF positions before servicing the machine.

WARNING!
Danger of electric shock
Main voltage exists in the switch enclosure and the pump motor wiring box. When handling this system or making any wiring connections, disconnect the main power. If there is damage to any of these components, disconnect it from the main power immediately and only return to service after an authorized repair has been made.

WARNING!
Warning of a dangerous or unknown feed chemical leak
Should a dangerous or unknown feed chemical be used, it may escape from the wetted fittings/tubing when working on the system. Take appropriate measures before working on the system (e.g. proper PPE, consult label or SDS of the chemical). Drain and flush all the plumbing before working on the system.

WARNING!
Danger from hazardous substances
Possible consequence: Fatal or very serious injury
Please ensure that when handling hazardous substances that you have read the latest safety data sheets provided by the manufacturer of the hazardous substance. The actions required are described in the Safety Data Sheet (SDS). Check the SDS regularly and replace, if necessary, as the hazard potential of a substance can be re-evaluated at any time based on new findings. The system operator is responsible for ensuring these SDS sheets are kept up to date, as well as for producing an associated hazard assessment for the work areas affected.

WARNING!
Danger to environment and personnel due to improper chemical disposal
The operator should follow all rules and regulations from local, regional and federal agencies as well as any directives from the feed chemical label concerning proper disposal of excess chemical and used chemical containers.

WARNING!
Always follow the chemical label
The system operator should always consult the specimen label of the chemical being pumped before making the application. Ensure that the target crop, target pest, application rate, and application method are all in compliance with the label prior to injecting said chemical. The label is the law! Fines and punishment could result from off-label application.

WARNING!
Warning of feed chemical spray during disconnection
Feed chemicals can spray out of the discharge hose if they are manipulated or opened due to pressure in the pump head and adjacent parts of the system. Disconnect the pump from the main power supply and ensure it cannot be switched on again by unauthorized personnel. Depressurize the system before commencing any work on wetted parts.

WARNING!
Warning of feed chemical spray due to piping blockage
The metering pump can generate extreme pressure. Discharge fittings/tubing can rupture if the discharge line is blocked. Ensure that the hose and injection check valve (Mister Mist'r®) is clear before pumping.
Ensure that the suction filter is clean and the filter element is installed properly and in good shape before pumping.

WARNING!
Warning of feed chemical spray due to high pressure fluid leak
There is a possibility of the head bolts on a MacRoy D working loose during transport. Loose head bolts may allow the spray of high pressure liquid around the head of the pump. Check the torque of the head bolts before the first use, after one week of use, and at least annually thereafter.

WARNING!
Warning of feed chemical spray due to material compatibility
An unsuitable feed chemical can damage the wetted parts of the system.
Take into account the resistance of the wetted materials when selecting the chemical to be pumped. Visit www.agri-inject.com for a chemical resistance chart.

CAUTION!
Danger of injury to personnel and material damage
The use of untested, non-conforming, third-party components can result in injury to personnel and material damage. Only fit parts to this system that have been tested and approved by Agri-Inject®.

CAUTION!
Warning against illegal operation
Observe the regulations (local, state, federal) that apply where the system is installed.

CAUTION!
Lifting Hazard
System is heavy. Single person lift could cause injury. When necessary, use assistance when moving or lifting.

CAUTION!
Danger from incorrect operation or poor maintenance
Danger can arise from this system due to incorrect operation and poor maintenance. Ensure operators are familiar with this manual and have access to SDS and specimen labels. Adhere to good maintenance practices.

DANGER!
Danger of property and/or equipment damage
The use of feed chemicals and/or feed chemical mixtures which are too viscous, laden with particles, or otherwise not suitable for mixing and/or pumping can cause damage to the pumping system, mixing system, tank or a combination thereof. Always follow feed chemical specimen label recommendations for pumping and mixing AND follow the limitations set forth in this operator's manual.

DANGER!
Danger of environmental damage or contamination
The use of this system without the recommended and proper backflow, check valve, and control interlock provisions can result in improper operation of the equipment resulting in unintended contamination of water supplies. Always follow local, state, and federal laws, codes, and regulations; specimen label recommendations; and operator's manual recommendations for proper installation and operation of fluid injection equipment.

8.2 SAFETY EQUIPMENT

It is important to have the proper safety equipment available and in-use during the operation of this system. See **Section 6.1** for Personal Protective Equipment.

Always wear the proper Personal Protective Equipment (PPE) when working on or near this MacRoy D Fertigation System. PPE can include the following:

PPE Category	Typical PPE Items
Eye and Face Protection	Goggles with side shields Face shield
Hand Protection	Gloves (hand) Gloves (lower arm)
Body Protection	Protective suit Shoe/boot covers
Respiratory	Face mask Respirator

Precautions should be taken dependent on the chemical being used. You should ALWAYS consult the Safety Data Sheet (SDS) of the chemical being used to determine the type of PPE to be used.

8.3 OPERATING EQUIPMENT

The following list of equipment is recommended to have available for proper use of the system during operation.

Description	Purpose
Stopwatch or Timer	Measure time during pump calibration Measure time of irrigation system
Paper towels	Clean up
Garden hose	Provide fresh water for clean up, flushing system, or filling tank
Calculator	Make calculations when timing and/or calibrating
Calibration and Record worksheets	Making calibration calculations and recording application event
Mister Mist'r flush tool	Cleaning Mister Mist'r
Mist'r Mind'r	Making repairs to Mister Mist'r
Hose cutter	Making clean cuts on replacement hose and tubing

Refer to the following chart to order operating equipment. Consult your local dealer for pricing.

Description	Quantity	Part Number
Clock/timer	1	418-00-000001-0
Kwik-Cut cutters	1	411-01-000001-0
Replacement cutter blade	1	411-50-000001-0
Mister Mist'r flush tool	1	831-02-011000-0
Mist'r Mind'r	1	228-58-011016-0

8.4 APPLYYOURSELF APP

Agri-Inject developed the ApplyYourself® app to assist growers with selecting and setting our injection systems. The ApplyYourself® app is provided free of charge and can be downloaded to your device from either the Apple App Store or the Google Play app store. Very intuitive and easy to use, just enter the relevant field and application data, and ApplyYourself®will guide you to select an appropriate pump and assist you in setting your pump for your current application. Thousands of growers worldwide have found the ApplyYourself® app to be an invaluable tool simplifying their injection operations. Scan the QR Code below for immediate access to the ApplyYourself® webpage at agri-inject.com.

8.5 PRIMING THE INJECTION PUMP

Important!
Prior to priming the pump, make sure that the system is properly mounted and secure, the Mister Mist'r injection quill and discharge hose assembly is properly installed and all fittings are tight.

Follow these steps to prime the injection pump

1. Make sure that the product in the tank is acceptable to pump.
    a. Many fertilizers precipitate salts. These salts should be remixed before pumping.
2. Turn the supply tank valve ON (if the tank is so equipped).
3. Turn the suction plumbing valve on the pump ON (if the suction plumbing is so equipped).
4. Crack the bleeder valve at the Mister Mist'r®
    a. Note: There is a tube included with the Mister Mist'r® and Bleeder Valve assembly that allows you to direct fluid from the bleeder valve into a container.
    b. Depending on the liquid level in the tank, the system may prime at this step and no further action will be necessary.
5. Ensure the pump adjustment knob is set to more than 75%
    a. Loosen the small lock knob screw before adjusting the knob.
    b. Tighten the lock knob screw when finished.
6. Turn the pump on.
7. Once a generous amount of solution (including all air bubbles) exits the bleeder valve, the pump should be primed.
8. Shut the pump off.
9. Close the bleeder valve.

8.6 CALIBRATING THE INJECTION PUMP

Important!
Prior to calibrating the pump, make sure that the system is properly mounted and secure, the Mister Mist'r injection quill and discharge hose assembly is properly installed and all fittings are tight.

MacRoy D series pumps are reasonably predictable; the knob setting is a good predictor of injection flow. For example: a MacRoy D50 with the knob set to 75% will inject close to 37.5 gallons per hour, perhaps a bit more. This level of predictability is generally considered sufficient for fertilizer injection service. As such, most MacRoy D systems are not equipped with calibration tubes. While MacRoy D series pumps have a long history of generally predictable knob settings over a broad range of conditions, manufacturing tolerances and other factors, such as liquid viscosity, can combine to create some variability. MacRoy D knob settings are not perfectly predictable. A small amount of variation from pump to pump and event to event should be expected.

When MacRoy D systems are used for more precise work, such as fumigant application, the pump is typically ordered with the appropriate suction plumbing and a calibration tube. When using a MacRoy D system with a calibration tube, use one of the two following procedures to calibrate the pump. Before using either method, first determine the appropriate Injection rate by using either the ApplyYourself® app (see **Section 8.4 APPLYYOURSELF APP**) or the following equation.

A = Acres of the field
G = Application rate in gallons per acre
T = Total gallons to apply
H = Irrigation cycle time in hours
GPH = The desired gallons per hour for injection
Pump Max = the maximum rating of the injection pump
P% = Pump percent setting

A x G = T
T / H = GPH
GPH / Pump Max x 100 = P%

Example:

A = 135 acres
G = 10 gallons per acre
H = 36 hours
Pump Max = 50 gallons per hour (MacRoy D50)

130 acres x 10 gallons per acre = 1300 total gallons to apply
1300 gallons / 36 hours = 36.1 gallons per hour
36.1 gallons per hour / 50 gallons per hour max X 100 = 72%

Set the pump percent knob to 72%

8.6.1 SIMPLIFIED METHOD (calibration result in gallons per hour)

1. Ensure the irrigation system is ON and operating properly.
2. Start the injection pump and ensure that it is fully primed and operating properly. Turn the pump back off.
3. Set the pump percent knob to the Pump Percent (P%) derived from the ApplyYourself® app (see **Section 8.4 APPLYYOURSELF APP**) or the above equation
4. Preset the o-rings on the calibration tube to a convenient, even number of mL apart.
    a. Select a number that is an even ten, e.g.: 400 or 1000 or 1200 mL apart
    b. Try to select a number that will result in at least 30 seconds test time
5. Carefully fill the calibration tube.
    a. With the main tank valve and suction plumbing valve open, slowly open the valve to the calibration tube.
    b. Filling the tube too fast will likely blow the dust cover off of the calibration tube.
    c. Shut the calibration tube valve when the calibration tube is nearly full.
6. Turn the pump on, pumping from the main tank.
    a. Ensure that the fluid level in the calibration tube is higher than the top o-ring.
7. When ready with a stopwatch, simultaneously close the suction plumbing valve and open the calibration tube valve.
8. Start the stopwatch when the fluid level in the tube reaches the top o-ring. Stop the stopwatch when the fluid level reaches the bottom o-ring.
9. Simultaneously close the calibration tube valve and open the suction plumbing valve.
10. Calculate in discharge in gallons per hour:
    a. mL / seconds x 0.9511 = gallons per hour
    b. mL is the distance between the o-rings in milliliters
    c. Seconds is the time on the stopwatch in seconds
        i. Be careful to use seconds: 1:15 is 75 seconds
    d. 0.9511 is a constant that converts milliliters per second to gallons per hour
11. Adjust the pump adjustment knob as necessary.
    a. If the test gallons per hour is less than the desired gallons per hour (GPH), turn the pump adjustment knob up slightly and repeat.
    b. If the test gallons per hour is more than the desired gallons per hour (GPH), turn the pump adjustment knob down slightly and repeat.
    c. If the test gallons per hour is equal to the desired gallons per hour (GPH), the system is properly calibrated.
12. Allow the pump to completely drain the calibration tube.
13. Close the calibration tube valve while opening the tank valve to configure the pump to draw liquid from the main tank.

8.6.2 TRADITIONAL METHOD (calibration result in minutes)

1. Use the ApplyYourself® app (see **Section 8.4 APPLYYOURSELF APP**) to find the “Calibrate To” value in milliliters
2. Ensure the irrigation system is ON and operating properly.
3. Start the injection pump and ensure that it is fully primed and operating properly.
4. Preset the pump percent knob to the Pump Percent (P%) derived from the ApplyYourself® app or the above equation

5. Preset the o-rings on the calibration tube so that the distance in milliliters between the o-rings is the same as the “Calibrate To” value from the ApplyYourself® app. Example: If (G) is 125 ml, set the o-rings 125 ml apart. Ie. Set one at 200 and the other one at 75.
6. Carefully fill the calibration tube.
    a. With the main tank valve and suction plumbing valve open, slowly open the valve to the calibration tube.
    b. Filling the tube too fast will likely blow the dust cover off of the calibration tube.
    c. Shut the calibration tube valve when the calibration tube is nearly full.
7. Turn the pump on, pumping from the main tank.
    a. Ensure that the fluid level in the calibration tube is higher than the top o-ring.
8. When ready with a stopwatch, simultaneously close the suction plumbing valve and open the calibration tube valve.
9. With the pump running, start the timer when the fluid level in the tube reaches the top tube. Stop the timer when the fluid level reaches the bottom o-ring.
    a. Simultaneously close the calibration tube valve and open the suction plumbing valve.
    b. If the timer is less than one minute, turn the pump adjustment knob down slightly and repeat.
    c. If the timer is more than one minute, turn the pump adjustment knob up slightly and repeat.
    d. If the timer is one minute, the system is properly calibrated.
10. Allow the pump to completely drain the calibration tube.
11. Close the calibration tube valve while opening the tank valve to configure the pump to draw liquid from the main tank.

8.7 SYSTEM OPERATION

Important!
Prior to operation of the system, make sure that the system is properly mounted and secure, the Mister Mist’r injection quill and discharge hose assembly is properly installed and all fittings are tight. Make sure the irrigation system is properly configured and the proper safety interlocks are in place. Follow all local, regional, state, and federal rules and regulations for chemigation. Follow all feed chemical specimen label instructions.

Ensure the suction plumbing, discharge plumbing, and electrical connections are satisfactory. Ensure also that the pump is fully primed (see **Section 8.6 PRIMING THE INJECTION PUMP).**

Set the pump knob to the proper percent setting as calculated by the ApplyYourself® app (see **Section 8.4 APPLYYOURSELF APP**) or the method provided in **Section 8.5 CALIBRATING THE INJECTION PUMP.** Be sure to loosen the adjustment knob lock screw before turning the adjustment knob. Lock the lock screw after setting the adjustment knob. Never use a pliers or any other tool to tighten the lock screw; finger tight is sufficient. The adjustment knob has micrometer style markings that read in percent of full rated flow. The numbers adjacent to the crosslines on the sticker under the knob indicate the tens units of percent, the number on the knob itself indicates the ones units. If 30, but not 40, is visible on the sticker and the 5 on the knob aligns with the sticker center line, the pump is set to 35%. Hash marks between the numbers on the knob allow the knob to be precisely set in 0.25% increments.

After setting the pump, turn on the irrigation system. When the irrigation system is operating, charged, and up to pressure, set the On-Off switch on the pump base to “On”. The pump will turn

on and begin pumping. Be sure the pump is pumping by observing the discharge hose (it should "buck" or bounce with every discharge stroke) and cracking the bleeder at the Mister Mist'r® (when the bleeder is slightly cracked, a very strong stream of fluid should emit from the bleeder).

Return to the site after an hour or so to see that the pump is pumping at the expected rate. With large fertilizer tanks, it may take at least an hour for the liquid volume to change by an observable amount.

The system should continue to inject at a steady rate while the irrigation system is running. When the irrigation cycle is complete, the electrical interlock mechanisms will turn the MacRoy D Fertigation System off.

Ensure there is sufficient fertilizer or chemical in the supply tank for the current fertigation or chemigation event.

Helpful Tip: It is considered good practice to have extra product in the supply tank. While the pump output is reasonably predictable, pivot cycle times are known to vary, sometimes by 30 minutes or more due to slippage, hills, and other factors. It is common to start with 100 gallons, or more, extra fertilizer in the supply tank. The small amount of fertilizer remaining at the end of a growing season is typically pumped through the pivot on one of the last irrigation events.

Ensure the following operating conditions:

- System is on level ground and will not shift or move during operation
- System is not in an area that would accumulate standing water during operation.
- Electrical cord is free from nicks and away from areas where snagging or other damage may occur.
- Electrical connections are tight and/or locked, shielded from water spray or other environmental hazards, and properly insulated.
- Supply tank valve is open.
- Suction filter elements are clean and seated properly.
- All plumbing connections are tight and in good shape.
- Bleeder valve relief port is fully closed.
- Discharge hose is positioned to eliminate potential snagging or damage.
- Mister Mist'r® check valve is in good condition and the seal and spring are suitable for operation.
- Backflow prevention upstream of the injection point is installed and in proper operating condition.
- System is interlocked with the irrigation control (either electrical or logical) to ensure system shutdown in the case of irrigation system stoppage or failure.
- Irrigation system is in suitable operating condition, nozzles and/or emitters are in good shape, and timers and/or controls are properly set.
- There are no human and/or non-target animals/crops that are within range of the irrigation coverage.
- Weather conditions are suitable for irrigation and feed chemical application

9.0 POST OPERATION

9.1 SAFETY

WARNING!
Danger of electric shock
Main voltage exists in the switch enclosure and the pump motor wiring box. When handling this system or making any wiring connections, disconnect the main power. If there is damage to any of these components, disconnect it from the main power immediately and only return to service after an authorized repair has been made.

WARNING!
Warning of a dangerous or unknown feed chemical leak
Should a dangerous or unknown feed chemical be used, it may escape from the wetted fittings/tubing when working on the system. Take appropriate measures before working on the system (e.g. proper PPE, consult label or SDS of the chemical). Drain and flush all the plumbing before working on the system

WARNING!
Warning of feed chemical spray during disconnection
Feed chemicals can spray out of the discharge hose if they are manipulated or opened due to pressure in the pump head and adjacent parts of the system. Disconnect the pump from the main power supply and ensure it cannot be switched on again by unauthorized personnel. Depressurize the system before commencing any work on wetted parts.

WARNING!
Warning of feed chemical spray due to piping blockage
The metering pump can generate extreme pressure. Discharge fittings/tubing can rupture if the discharge line is blocked. Ensure that the hose and injection check valve (Mister Mist'r®) is clear before pumping.
Ensure that the suction filter is clean and the filter element is installed properly and in good shape before pumping.

CAUTION!
Warning against illegal operation
Observe the regulations (local, state, federal) that apply where the system is installed.

9.2 SAFETY EQUIPMENT

It is important to have the proper safety equipment available and in-use during post operation actions. Please consult **Section 6.1** for a list of the recommended safety equipment.

9.3 FLUSHING THE SYSTEM

Important!
Make sure to use the proper Personal Protective Equipment (PPE) when flushing the MacRoy D Fertigation System. Be sure to follow all instructions on the feed chemical specimen label with regards to clean up and disposal of unused chemical and rinsate.

The MacRoy D Fertigation System should be flushed, cleaning the feed chemical from the suction plumbing, strainer, check valves, pump head, discharge hose, and Mister Mist'r®. For the best results and reliable check valve operation, the system should be flushed after each use.

Water is normally an excellent flushing agent. However, some chemicals and/or chemical mixtures may be incompatible with water. If this is the case, please use the appropriate solution to flush.

It is recommended (and usually very convenient) to flush the MacRoy D Fertigation System out at the pivot. The pivot normally has both 480 volt electricity and water available. It is considered good practice to rinse remaining fertilizers or chemicals into the pivot while it is operating. The rinse products will be very dilute and will not require rinsate disposal at an alternate location.

To flush the system with water, follow the steps below:

1. If the pivot irrigation system has a hose bib faucet, it is easiest to flush the system with the pivot running.
2. Close the valve on the supply tank and disconnect the suction hose from the tank on the tank end; leave the hose connected to the pump.
3. With the pivot running, hold the end of the hose higher than the pump and turn the pump on.
4. Allow the pump to pump all of the remaining fertilizer or chemical out of the suction hose. Running the pump dry for a short period of time will not damage the pump.
5. Use a garden hose to fill the suction hose while the pump is running.
6. Allow the pump to pump all of the water out of the suction hose. Repeat as necessary to ensure all of the residues have rinsed through the pump and into the irrigation system.

If flushing the system for the last time in a growing season:

1. Bring one gallon of windshield washer solvent rated at minus 20 degrees fahrenheit (or colder) with you.
2. After completing the process above, fill the suction hose with windshield washer solvent while the pump is running.
3. Pump the whole gallon of windshield washer solvent through the pump. This both cleans the pump very well and leaves a gentle antifreeze solution in the pump head.
4. Disconnect the electrical connection and discharge plumbing.
5. Transport the system to the storage facility.

If flushing the system at a location other than a pivot or other irrigation system:

1. Force water through the pump and the discharge hose with a garden hose.
2. Disconnect the discharge hose.
3. Hold the suction hose (if attached) high in the air to drain most of the water from the hose and through the pump head.
4. Fill the suction hose with windshield washer solvent rated at -20 degrees fahrenheit (or colder).
5. Hold the suction hose (if attached) high in the air to drain most of the windshield washer solvent from the hose and through the pump head.
6. Repeat as necessary to run a whole gallon of windshield washer fluid through the pump head.
7. Place the system in the storage facility.

9.4 STORAGE

If the system will not be in use for more than one month, the following storage procedure is recommended.

1. Follow the instruction in **Section 9.3 Flushing The System**

2. Remove the filter bowl and thoroughly clean the filter element and the bowl. Check the condition of the filter, gasket, and bowl. Replace as necessary.
3. Inspect the suction hose, discharge hose, and fittings. Replace if cracked, discolored, or otherwise defective.
4. While not typically necessary, if storing the system in an extremely cold environment, consider blowing the system out with compressed air leaving just a mist of windshield washer solvent in the pump.
5. Store the system in a sheltered area out of the sun and harsh weather.

10.0 MAINTENANCE

10.1 SAFETY

WARNING!
Danger of electric shock
Main voltage exists in the switch enclosure and the pump wiring box. When handling this system or making any wiring connections, disconnect the main power. If there is damage to any of these components, disconnect it from the main power immediately and only return to service after an authorized repair has been made.

WARNING!
Warning of a dangerous or unknown feed chemical
Should a dangerous or unknown feed chemical be used, it may escape from the wetted fittings/tubing when working on the system. Take appropriate measures before working on the system (e.g. proper PPE, consult label or SDS of the chemical) Drain and flush all the plumbing before working on the system

WARNING!
Warning of feed chemical spray due to piping blockage
The metering pump can generate extreme pressure. Discharge fittings/tubing can rupture if the discharge line is blocked. Ensure that the hose and injection check valve (Mister Mist'r®) is clear before pumping.
Ensure that the suction filter is clean and the filter element is installed properly and in good shape before pumping.

10.2 PERIODIC AND PREVENTIVE MAINTENANCE

To avoid excessive downtime in the event of a parts malfunction, it is a good idea to keep some common replacement parts in stock. See the chart below for the Macroy D 25 and 50.

Macroy D 25/50 Specific Parts:

Description	Quantity Recommended	Part Number
Plug In Elbow, 3/8 X 3/8 PP (G55)	1	199-09-012012-1
Tube X Hose, 3/8 X 1/2 PP (G55)	1	199-13-012016-1
G Diaphragm, B40	1	900-60618
G O-Ring, Viton, B40 Check Valve	4	900-408-0068075
G Seat 5/8 PVDF GB-40	2	900-224-0173078
Oil Seal MacRoy G & D	1	900-60048
Oil, Pump Defender D629	3	410-01-080629-0
Clock/timer	1	418-00-000001-0
Kwik-Cut cutters	1	411-01-000001-0
Replacement cutter blade	1	411-50-000001-0
Mister Mist'r® flush tool	1	831-02-011000-0

The MacRoy D Fertigation System is designed to operate in the agricultural environment with minimal trouble. However, routine maintenance of the oil seal, check valve o-rings, check valve seats, and diaphragm is recommended for optimum performance. Routine maintenance following the recommended service intervals has proven to provide years and years of reliable and dependable service.

The recommended service intervals are:

- **Every year**: Replace the oil seal, check valve o-rings, and change the oil.
    - Due to the typically wet and humid irrigation environment, Agri-Inject® recommends changing the oil every year.
- **Every three years**: Perform the annual maintenance above and additionally replace the diaphragm and check valve seats.

Agri-Inject® provides the following 1 year and 3 year service kits:

Pump	Service frequency	Part Number
MacRoy D25/50	1 Year	900-RPM-B40G-1YR
MacRoy D25/50	3 Year	900-RPM-B40G-3YR

Due to the shear loads imparted on lubricants by worm gear drives, Agri-Inject® strongly recommends the use of Pump Defender D629 extreme pressure lubricating oil for MacRoy D pump service. Part Number: 410-01-080629-0

These pump parts can be obtained by contacting your local dealer.

Parts orders must include the following information:

- Part number
- Part description
- Quantity
- Pump model number (on pump nameplate)
- Pump serial number (on pump nameplate)

Always include the pump serial number and the model number in all correspondence regarding the unit.

10.3 PARTS REPLACEMENT

The annual and three year preventive maintenance requires general mechanical knowledge and experience. There are no special tools required for the repair or service of MacRoy D pumps. If you are uncomfortable performing the maintenance tasks, contact your dealer or Agri-Inject® for

assistance. Agri-Inject® has a fully staffed and equipped service facility performing repair and service on hundreds of Agri-Inject® pumps annually.

Agri-Inject® provides a helpful video for training and assistance in the repair and service of MacRoy D pumps. The video is provided on the Agri-Inject® website: www.agri-inject.com. Click on the Support tab and select Video Library. Then select the Agri-Inject-Basic Maintenance-Series D Pump.

Feel free to ask for service and repair advice or assistance by calling Agri-Inject® at (800) 446-5328 or (970) 848-5336 and asking for pump service support.

Helpful tips:

- Never use teflon tape, pipe dope, or any other sealant on check valve threads. Check valves seal to the pump head and the plumbing unions with o-ring seals. Always replace the o-rings annually to prevent leaks.
- Never tighten the check valves to the head or the check valve union nuts tighter than hand tight. The o-ring seals are very pliable and do not require tools to tighten.
- Ensure that check valves are oriented properly. All of the check valves have indicating arrows molded into the midsection ridge between the external threads. **The indicating arrows on both check valves must point up.**
- Remove and install oil seal:
    - The oil seal is held in place on its inside diameter by the white PTFE seal ring
    - Remove head, diaphragm assembly, and connecting rod adapter to expose white PTFE seal ring.
        - Spray the nuts on the head bolts with penetrating oil several minutes before removing the nuts.
    - The oil seal is held in place on its outside diameter by the bell housing.
    - Spray the 4 bell housing screws with penetrating oil several minutes before removal.
    - Remove the motor fan cover
    - Turn the stroke adjusting knob to 100%
    - Rotate fan until connecting rod is pulled in to its maximum stroke.
    - Remove the old oil seal and install a new one.
    - Ensuring that the oil seal outer diameter stays in the housing recess, carefully install the bell housing.
        - Tighten the four hex head screws in at least 3 steps bringing the bell housing square and flat against the main pump housing.
- Assemble diaphragm assemblies by:
    - Start by screwing the 10mm x 45mm stud, nose first, all of the way into the plastic diaphragm nut, then backing the stud out 2 complete turns.
    - Install the diaphragm to the plastic nut with the convolution facing away from the plastic nut.
    - Slide the stud through the stainless steel support nut.
    - Install the 10mm thin nut onto the stud.
        - Use a 5 mm hex wrench to prevent stud from turning.
        - Tighten the thin 10 mm nut snugly with a 17 mm box end wrench
    - Using a 17 mm box end wrench to hold the 10 mm thin nut on one side, tighten the plastic diaphragm nut with an open end or adjustable (Crescent style) wrench as tight as possible without rounding off the corners of the plastic nut.
    - **It is imperative that the center stud does not contact the plastic nut and**

that the plastic is very snug (tightly compressing the diaphragm) to effect a good seal.

- Install the connecting rod adapter to the connecting rod:
  - Install the short 8mm stud into the connecting rod approximately 1/2 of its length.
  - Install the white PTFE seal ring on the nose of the connecting rod.
  - Insert a 4 mm hex wrench through the adapter to prevent the 8mm stud from turning.
  - Thread the adapter onto the stud.
  - Tighten the adapter firmly hand tight
- Place spring in position:
  - Turn the motor fan until the connecting rod projects out of the pump body to its maximum stroke.
  - position the pump on its back with the connecting rod pointing up.
    - Use a 3-1/2” wood block under adjustment knob to support the pump.
  - Install the spring cup in the bell housing with the recess pointing up.
  - Place the spring in the spring cup.
- Install the diaphragm assembly carefully:
  - Install the diaphragm support backing ring to the pump body with the chamfer facing out toward the diaphragm.
  - Thread the diaphragm assembly to the connecting rod adapter.
    - It may be necessary to compress the spring while turning the diaphragm assembly.
    - Tighten the diaphragm assembly slightly more than hand tight. **Do not over tighten**.
  - Rotate the fan until the connecting rod has pulled in to its maximum stroke.
  - Install the head:
    - **It is imperative that the diaphragm remain flat and that the head is drawn up evenly, tightly compressing the diaphragm to effect a good seal.**
    - Tighten the head flat against the diaphragm by tightening the head bolts in evenly in a criss/cross pattern.
    - Tighten the bolts equally in at least three steps to a final torque of 90 inch pounds.

11.0 MacRoy D50 PARTS BREAKDOWN

1 | Complete System View

Item No.	Qty	Part Number	Description	
1 - 10		**882-34-111050-0**	**NOMAD FERT, 3PH 480V, SWITCH, STRAINER, MISTER, D50**	
1	1	500-34-000050-0	PUMP, MACROY D50, 3PH, PREPPED	*
2	4	301-50-010032-0	BOLT, SS 5/16-18 X 1 HEX HEAD	
3	2	350-50-004006-0	SCREW, THREAD ROLLING, SS, 4-40 X 3/16	
4	1	280-50-000000-2	PLATE, SERIAL/ UNIT ID, GREEN IMPRINTED	
5	1	880-34-000004-0	NOMAD D BASE & SWITCH ASSEMBLY, 3PH 480V AC	*
6	1	803-03-024004-0	NOMAD FERT 3/4 D25/ D50	*
7	1	199-01-012016-1	JG MALE CONNECTOR, 3/8 X 1/2 PP	
8	1	199-09-012012-1	JG PLUG IN ELBOW, 3/8 X 3/8 PP - VITON	
9	1	849-07-016012-0	HOSE KIT, GREY 1/2 X 3/8 12'	*
10	1	820-02-181012-0	MISTER & BLEEDER ULTRA ASSEMBLY 3/8 JG ULTRA BLEEDER	*

* *Indicates this subassembly has a breakdown on a subsequent page*

Applicable Model Numbers
882-34-111050-0

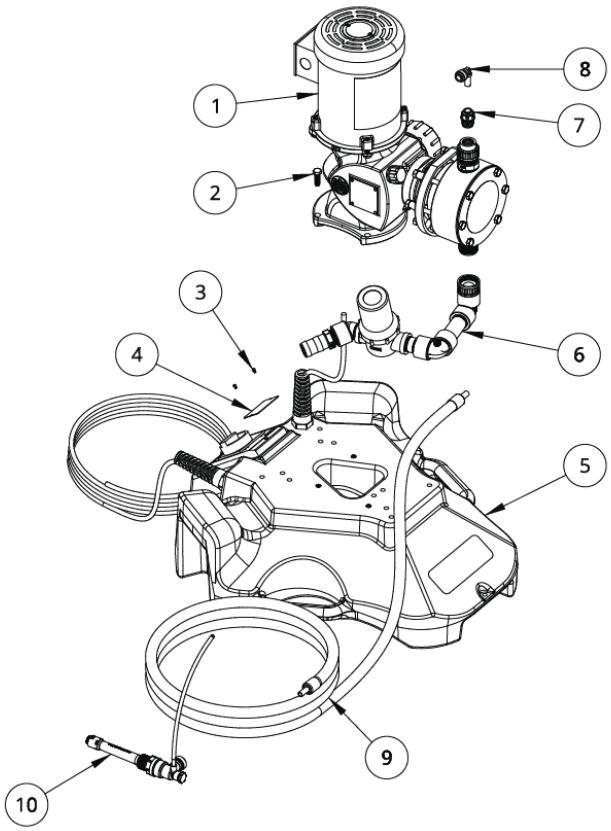

Notice: Confidential Information. This drawing and the items it depicts are the property and confidential information of Agri-Inject, Inc. Do not disclose this drawing to any third party. All intellectual property in the drawing belongs to Agri-Inject, Inc. This schematic and its associated components are subject to change without notice. Please call your local Agri-Inject dealer or the factory to confirm compatibility and accuracy.

2 | Pump Prep

Item No.	Qty	Part Number	Description
1 - 12		**500-34-000050-0**	**PUMP, MACROY D50, 3PH, PREPPED**
1	1	500-01-000050-0	PUMP MACROY D 50 GPH 3PH *
2	1	280-12-200000-0	DECAL, ROTATION CLOCKWISE
3	1	280-12-900001-2	DECAL, WARNING! HIGH VOLTAGE, LG
4	1	280-12-900008-1	DECAL, 480 VOLTS, 3 PH, 60HZ
5	1	280-14-010500-0	DECAL, TOP 50 G.P.H.
6	1	280-13-000500-0	DECAL, PUMP HEAD, 50 GPH
7	1	280-50-000000-3	PUMP SIZE BLANK PLATE
8	2	373-50-004000-1	RIVETS, STEEL, 1/8 SS MOTOR PLATES
9	6	655-04-002214-0	WIRE NUT, CONNECTOR BRONCO 22-14
10	1	657-08-016000-E	STRESS CONNECTOR, PG16 ELBOW W/ COIL
11	1	660-60-002000-0	WIRE TERM FORK SPADE BLUE
12	1	280-12-700000-0	DECAL, STEPS TO SUCCESSFUL INJECTION
13	1	604-02-001003-1	CONDUIT BOX
	1	604-02-001003-2	CONDUIT BOX COVER
	1	604-02-01003-3	CONDUIT BOX GASKET
	4	604-02-001003-4	CONDUIT BOX SCREWS

* *Indicates this subassembly has a breakdown on a subsequent page*

Applicable Model Numbers
500-34-000050-0

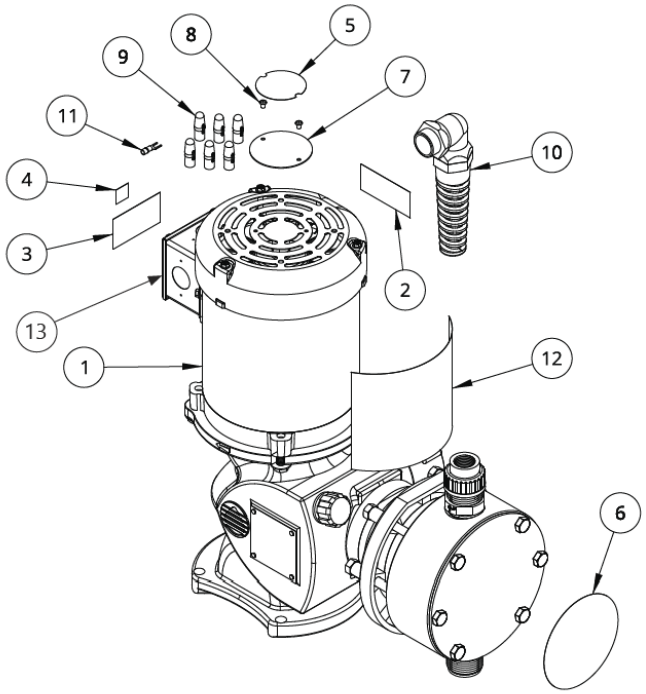

3 | PUMP BREAKDOWN

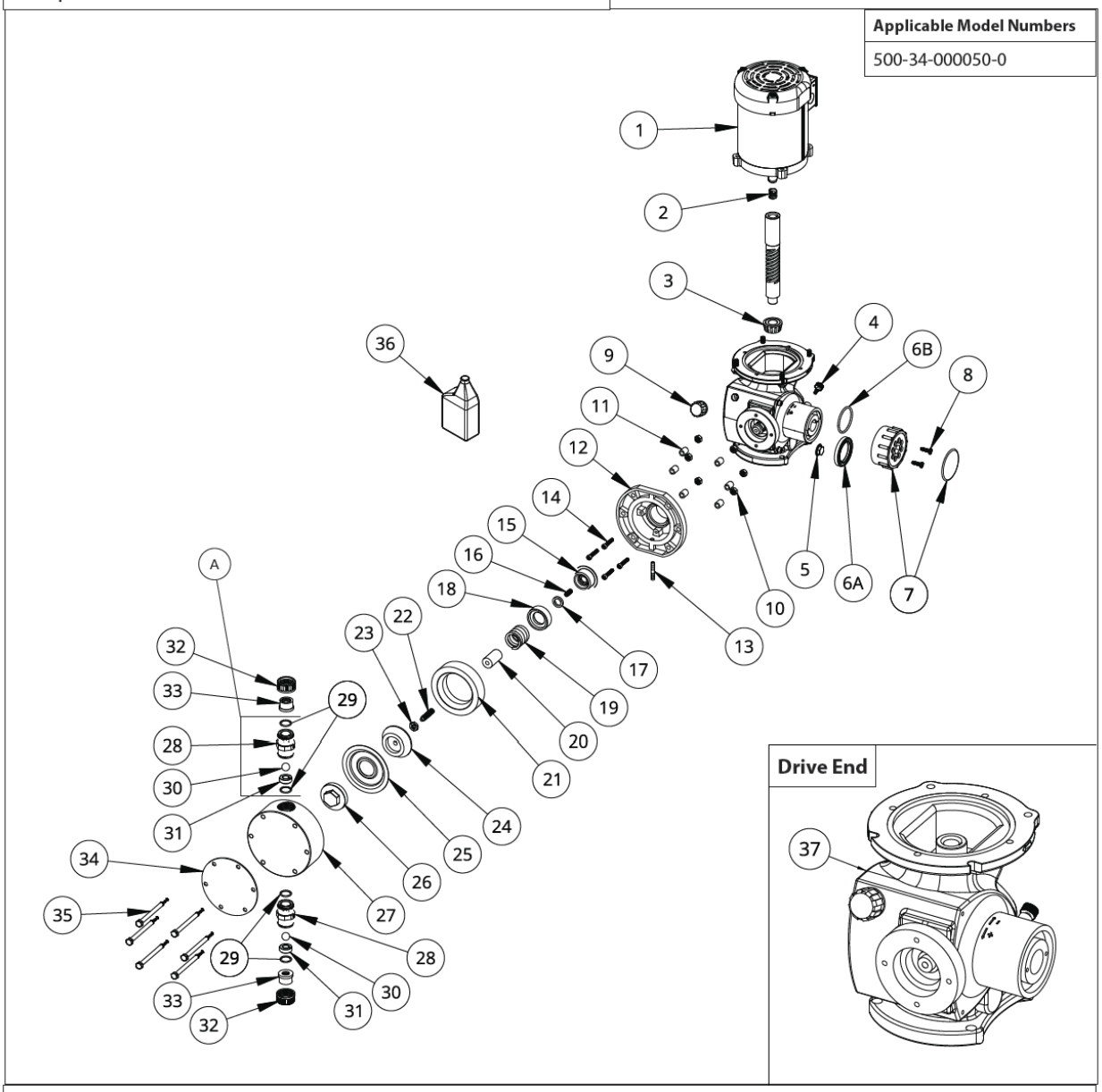

Notice: Confidential Information. This drawing and the items it depicts are the property and confidential information of Agri-Inject, Inc. Do not disclose this drawing to any third party. All intellectual property in the drawing belongs to Agri-Inject, Inc. This schematic and its associated components are subject to change without notice. Please call your local Agri-Inject dealer or the factory to confirm compatibility and accuracy.

3 | PUMP BREAKDOWN

Applicable Model Numbers
500-34-000050-0

Item No.	Qty	Part Number	Description
1 - 37		**500-01-000050-0**	**PUMP MACROY D 50 GPH 3PH**
1	1	603-56-014173-2	MOTOR 1/4HP 3PH 56C LEESON \ 103710.00
2	1	900-60264	G SPRING G SERIES
3	1	900-409-0116040	PP MOTOR BEARING, TOP 6203
4	1	908-5600400022N	PP LOCK SCREW
5	1	900-60086	OIL DRAIN PLUG
6A	1	908-2502110067N	PP SEAL, SIDE COVER,FOR D, G, & GM *OLD*
6B	1	900-408-0095171	G O-RING 2-226 BUNA N *NEW*
7	1	900-60296	G STROKE CONTROL KNOB KIT
8	2	351-50-103216-0	SCREW, 10-32 X 1/2 PHILIPS PAN HEAD
9	1	900-41065	G VENT WITHOUT DIPSTICK
10	6	900-435-0000045	HEX NUT, M8, 304SS
11	6	900-61152	NUT SPACER
12	1	908-60673	PP SPACER TO BELL HOUSING GM0090-GM0500
13	1	900-470096073N	BLOW-OFF NOZZLE
14	4	900-4350047395N	SOCKET HEAD SET SCREW M6X30, 304SS
15	1	900-60048	OIL SEAL - MACROY G & D
16	1	900-4350016075N	SOCKET HEAD SET SCREW, M8X20
17	1	900-61154	PTFE SEAL RING
18	1	900-61153	SPRING CUP
19	1	900-70081	G SPRING, MACROY D7/8
20	1	900-61155	G ADAPTER CONNECTING ROD, SD 7/8 D7
21	1	900-60035	G DIAPHRAGM SUPPORT GB40
22	1	900-435-0071284	SOCKET SET SCREW DOG PT M10X45M ST
23	1	900-61068	HEX NUT, M10 THIN, 316SS
24	1	900-61065	SUPPORT NUT
25	1	900-60618	G DIAPHRAGM, B40
26	1	900-60628	G DIAPHRAGM CAP GB40 PVC
A	2	900-305-0870007	GB40 CHECK VALVE, PVDF ,O-RINGS, SEAT & 5/8 CERAMIC BALL
27	1	900-60882	G DIAPHRAGM HEAD(B40 LIQ END)BLK PP MACG40
28	2	900-60024	PP CARTRIDGE BODY PVDF GB40
29	4	900-408-0068075	G O-RING, VITON, B40 CHECK VALVE
30	2	900-407-0015171	G SUCTION CART BALL 5/8 CERAMIC
31	2	900-224-0173078	G SEAT 5/8 PVDF GB-40
32	2	900-432-0235038	G UNION NUT B40
33	2	900-60119	1/2 G UNION END
34	1	900-60754	G BACK-UP PLATE
35	6	900-435-000165	G GB60 HEAD BOLT, HEX HEAD SCREW M8-1.25X110 304SS
36	3	410-01-080629-0	OIL, PUMP DEFENDER D629
37	1	900-SD-10-06-NE56C	D DRIVE END HOUSING,10:1, 50GPH PUMP

* For pumps pior to 2004, use the "old" seal, and for pumps after 2004, use the "new" o-ring.

RPM Kit: 1 Year

It is recommended that the following parts are changed every year.

Item No.	Qty	Part Number	Description
		900-RPM-B40D-1YR	**RPM KIt 1 Year**
15	1	900-60048	OIL SEAL - MACROY G & D
29	4	900-408-0068075	G O-RING, VITON, B40 CHECK VALVE
36	1	410-01-080629-0	OIL, PUMP DEFENDER D629

RPM Kit: 3 Year

It is recommended that the following parts are changed every three years.

Item No.	Qty	Part Number	Description
		900-RPM-B40D-3YR	**RPM KIt 3 Year**
15	1	900-60048	OIL SEAL - MACROY G & D
25	1	900-60618	G DIAPHRAGM, B40
29	4	900-408-0068075	G O-RING, VITON, B40 CHECK VALVE
31	2	900-224-0173078	G SEAT 5/8 PVDF GB-40
36	1	410-01-080629-0	OIL, PUMP DEFENDER D629

4 | Base & Control Switch Assembly 3PH 480V

Item No.	Qty	Part Number	Description
1 - 11		**880-34-000004-0**	**NOMAD D BASE & SWITCH ASSEMBLY, 3PH 480V AC**
1	1	655-04-002214-0	WIRE NUT, CONNECTOR BRONCO 22-14
2	1	608-01-000002-0	ENCLOSURE, FLUSH MOUNT
3	1	615-01-006010-0	SWITCH, 0.6-1.0 AMP, MANUAL MOTOR PROTECTOR
4	2	657-08-016000-S	STRESS CONNECTOR, PG16 STRAIGHT W/COIL
5	1	280-12-900002-2	DECAL, WARNING! HIGH VOLTAGE SM
6	1	280-12-900008-1	DECAL, 480 VOLTS, 3 PH, 60HZ
7	1	280-12-900001-0	DECAL, 1.0 AMPS MAX
8	1	195-26-010014-0	O-RING, 5/16ID X 7/16OD ENCLOSURE
9	1	216-02-003004-0	BASE, NOMAD FERT, MACROY D
10	1	862-00-015164-0	POWER CORD, 3PH 16/4 15 ft, A&P ASSEMBLY
11	1	280-12-900001-3	DECAL PUMP

Applicable Model Numbers
882-34-11n050-n

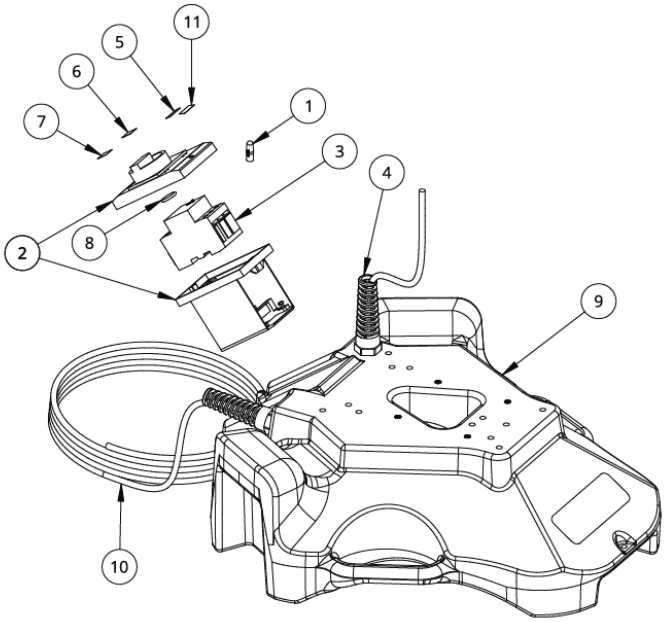

Notice: Confidential Information. This drawing and the items it depicts are the property and confidential information of Agri-Inject, Inc. Do not disclose this drawing to any third party. All intellectual property in the drawing belongs to Agri-Inject, Inc. This schematic and its associated components are subject to change without notice. Please call your local Agri-Inject dealer or the factory to confirm compatibility and accuracy.

5 | Three Phase Wiring Diagram

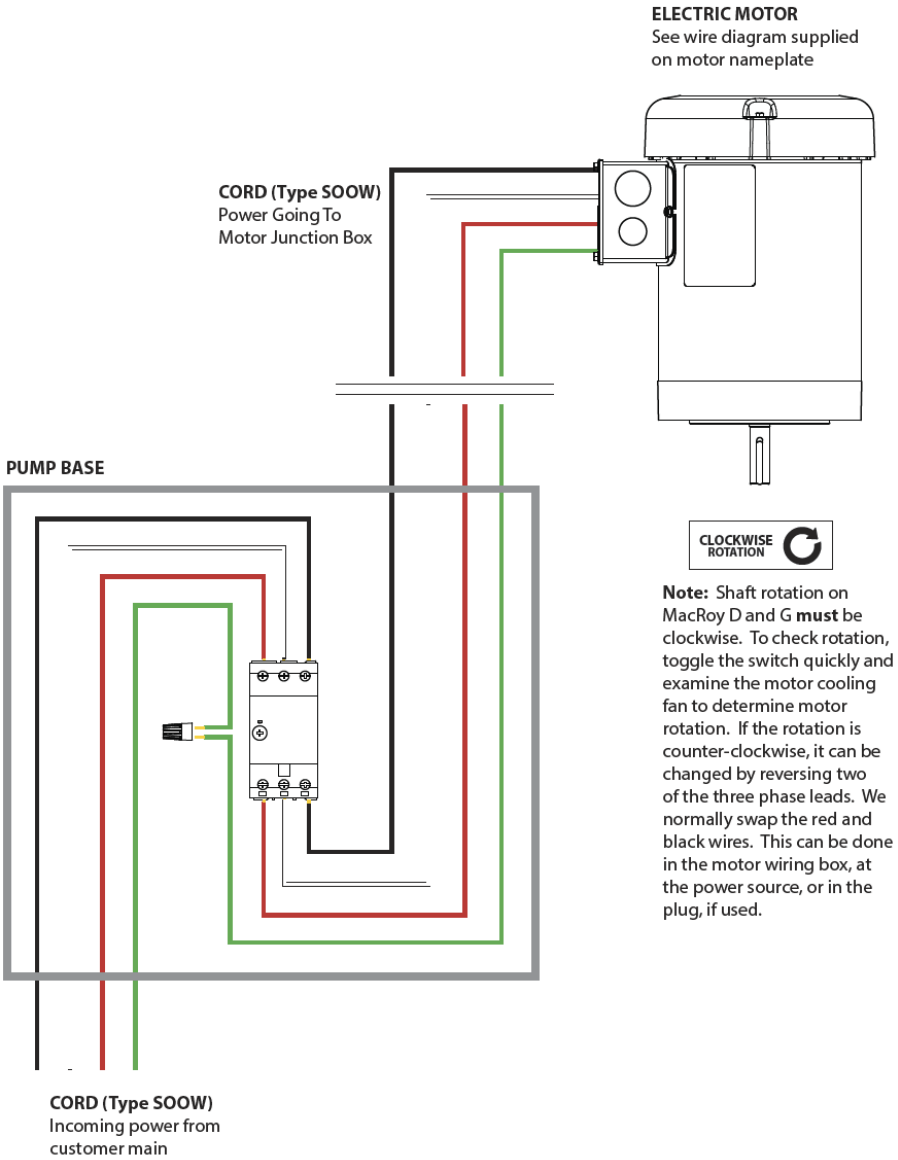

Note: Shaft rotation on MacRoy D and G **must** be clockwise. To check rotation, toggle the switch quickly and examine the motor cooling fan to determine motor rotation. If the rotation is counter-clockwise, it can be changed by reversing two of the three phase leads. We normally swap the red and black wires. This can be done in the motor wiring box, at the power source, or in the plug, if used.

6 | Strainer Assembly, Nomad Fert, 3/4 D50

Item No.	Qty	Part Number	Description
1 - 12		**803-03-024004-0**	**NOMAD FERT 3/4 D25/D50**
1	1	104-01-024000-1	STREET ELBOW, 3/4 45 PP
2	1	125-01-024032-0	HOSE BARB, 3/4 X 1
3	1	101-01-024064-0	NIPPLE, 3/4 X 2 PP
4	1	101-01-024112-0	NIPPLE, 3/4 x 3-1/2 PP
5	2	103-01-024024-0	ELBOW, 3/4 PP FNPT
6	1	217-01-024000-0	UNION END, 3/4 NPT
7	1	900-432-0236038	G UNION NUT B40
8	1	155-03-002000-0	STRAINER, "CLEAR BOWL ONLY" 3/4
9	1	155-01-024024-0	STRAINER, "POLY TOP ONLY" 3/4
10	1	154-27-000024-0	GASKET, 3/4 EPDM ***Standard***
	1	154-26-000024-0	GASKET, 3/4 VITON STRAINER ***Optional***
11	1	153-01-024040-0	SCREEN, 3/4 PP 40 MESH
12	1	150-01-024040-1	STRAINER, 3/4 CLEAR BOWL, 40 MESH SCREEN

Applicable Model Numbers
882-nn-n1n050-0

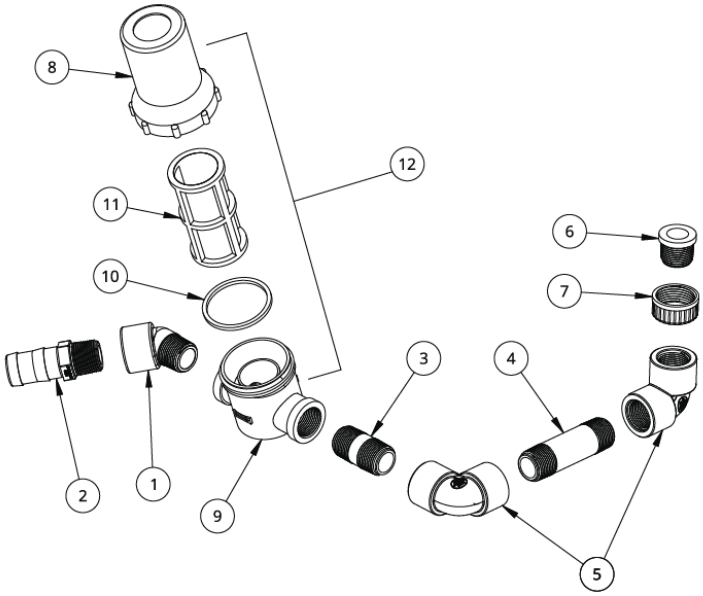

Notice: Confidential Information. This drawing and the items it depicts are the property and confidential information of Agri-Inject, Inc. Do not disclose this drawing to any third party. All intellectual property in the drawing belongs to Agri-Inject, Inc. This schematic and its associated components are subject to change without notice. Please call your local Agri-Inject dealer or the factory to confirm compatibility and accuracy.

7 | Hose Kit

Item No.	Qty	Part Number	Description
1 - 3		**849-07-016012-0**	**HOSE KIT, GREY 1/2 X 3/8 12'**
1	12	261-07-016000-0	HOSE, 1/2 GREY NYOBRAID
2	2	371-59-000800-0	FERRULE, #800 ***FACTORY INSTALLED***
2A	2	365-50-000006-0	HOSE CLAMP, SS #6 J 1/2 BAND ***REPLACEMENT ONLY***
3	2	199-13-012016-1	JG TUBE X HOSE, 3/8 X 1/2 PP

Applicable Model Numbers
849-07-016012-0

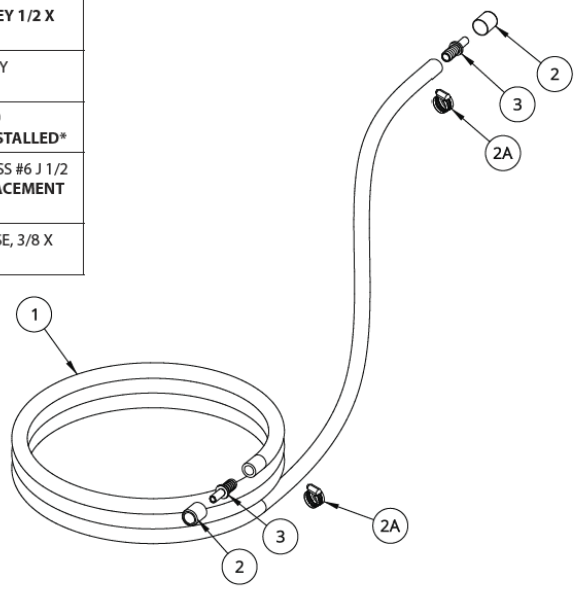

8 | Ultra Mister & Bleeder Assembly

Item No.	Qty	Part Number	Description
1 - 5		**820-02-181012-0**	**MISTER & BLEEDER ULTRA ASSEMBLY 3/8 JG ULTRA BLEEDER**
1	1	820-02-008100-0	MISTER MIST'R-ULTRA, YELLOW-POLY 15PSI
2	1	226-33-032000-0	MISTER MIST'R STAN ELASTOMER
3	1	821-02-016012-0	BLEEDER VALVE 3/8 JG
4	1	227-26-180040-0	O-RING, .180 X .040 VITON
5	1	260-02-250150-1	MT, PE-250 X 150 ORANGE

Applicable Model Numbers
820-02-181012-0

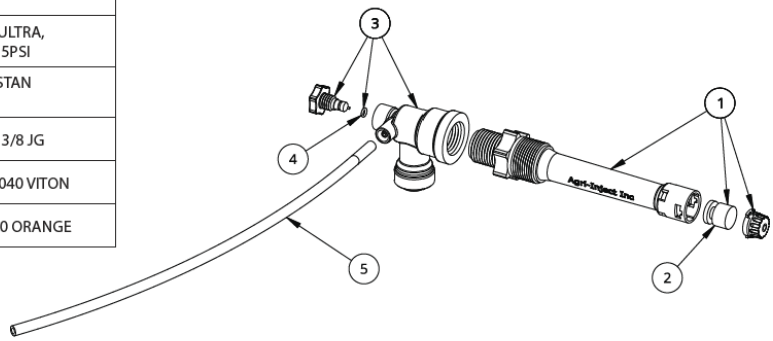

12.0 INSTALLATION AND PIPING APPENDIX

Installation - Piping

The figure below displays a typical installation schematic for a chemigation and/or a fertigation setup, including the recommended piping and accessories. This may not be an exact representation of every installation. Note: This is only a representation of the piping components and no electrical, mechanical or environmental representations are being made.

Typical Piping Diagram - Chemigation/Fertigation

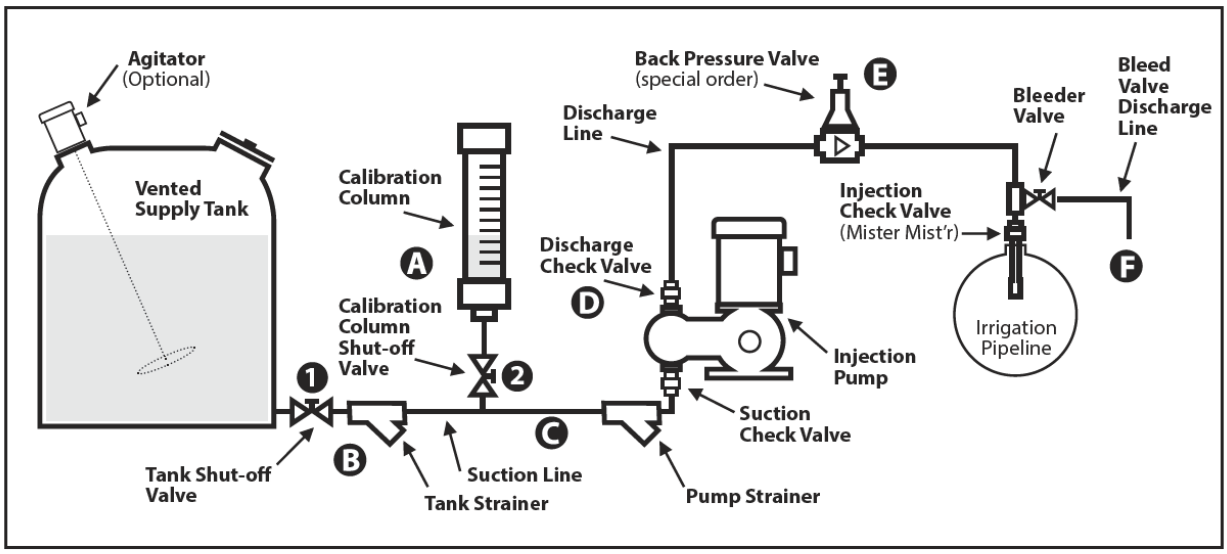

General Piping Considerations

It is imperative to use proper materials for all piping components that are compatible with the liquid being pumped. Ensure that Agri-Inject is made aware of the process liquid so that the correct material of construction can be selected. Use piping rated for maximum pressures. Remove burrs, sharp edges, and debris from inside piping. Do NOT use teflon tape for thread sealant; use a non-teflon paste.* Only use approved suction and discharge hoses/tubing from Agri-Inject for the material being pumped.

Tank Considerations

The supply tank should be constructed of materials that are compatible with the pumped liquid AND suitable for the environmental conditions in which it is placed.

The tank must be vented (typically in the lid) to ensure easy and proper withdrawal of liquid from the container. Without proper and adequate venting, the system can vapor lock and cause piping, pump, and/or vessel damage.

The tank should be located close to the injection pump and physically above the injection pump if possible. Use a fully drainable tank when possible to minimize waste/leftover liquid.

When equipped with mixing apparatus, it is important that the action of the agitiation is properly mixing the solution and/or slurry to keep it in a homogenous state that will be suitable for pumping. Ensure that the mixing action does not introduce air into the suction piping which would cause inaccurate pump delivery. Ensure the mixing is effective enough to keep large particles from entering the suction line which may quickly clog the strainer and potentially foul the pump check valves. Some slurries require special considerations. Check with Agri-Inject for application recommendations.

* Teflon tape can easily plug up plumbing and pump components. Teflon paste is non-dissolvable if a 'glob' of it happens to get stuck in a check valve and can cause maintenance problems.

Suction Piping Considerations

Size suction piping to accommodate peak instantaneous flow, which is usually up to 5 times the average flow due to the reciprocating nature of the injection pump. See table on Page MRBL-005.

When pumping viscous fluids, it is often necessary to use suction piping up to four times larger than the size of the connection on the pump (or the size provided in the table on Page MRBL-005).

It is preferable to have the suction of the pump flooded by locating the liquid end of the pump below the lowest level of liquid in the tank. This greatly facilitates pump priming and allows the pump to operate the most accurately. Note: Agri-Inject chemigation systems are designed with this aspect in mind.

To minimize the chance of loss-of-prime condition, the pump should be installed as close as possible to the tank/supply container. To eliminate vapor problems, it is preferred to have a slight downward slope of piping from the tank to the pump suction check valve.

Avoid negative suction pressure conditions (ie. suction lift), as such conditions adversely affect metering accuracy. All Agri-Inject pumps have a maximum limit of about 6 ft (1.9m) of water column and require special equipment to operate properly.

Minimize the use of elbows, reducers and other fittings which will cause additional friction and reduced capacity in the suction piping.

At least one strainer should be used in the suction line to prevent foreign particles from entering the liquid end. This, and any other measures which prevent debris from entering and fouling the liquid end check valves (ie. double filtration), will give increased maintenance-free service. Check strainer frequently to prevent blockage which could lead to pump cavitation. In fertilizer pumping applications, it is often a good idea to have a strainer at the tank and another one at the pump. This ensures a cleaner liquid into the pump head with liquids that can frequently be 'dirty'.

If the injection pump is set up to draw from the top of the container (ie. a common arrangement is a pump mounted on top of a drum), it is necessary to have a foot valve/strainer on the bottom of the suction dip tube inside the container.

Suction piping must be absolutely airtight to ensure accurate pumping. Inspect for potential piping leaks after installation. Double check all fittings, hoses, and hose clamps.

Discharge Piping Considerations

Ensure that the size of the discharge piping is large enough to prevent excessive pressure losses on the discharge stroke of the pump. Maximum pressure at the discharge fitting on the pump must be kept at or below the rated pressure of the pump. The discharge pressure must be at least 10 psi greater than the suction line pressure for the pump to ensure a controlled flow. Ensure that the injection check valve spring pressure and/or irrigation pipe pressure is appropriate to achieve this difference. Otherwise a back pressure valve would be a suitable option (see diagram on previous page).

Valves

Back Pressure Valve

All metering pumps are prone to overpumping at low discharge pressures. To prevent this condition, ensure that there is proper back pressure against the pump (mRoy A/P: 50psi; mRoy B: 70 psi; MacRoy G: 20 psi; MacRoy D: 10psi | Note: In slurry applications with MacRoy pumps which necessitate stainless steel balls and seats, the required back pressure is 50 psi). This can be accomplished through the installation of a back pressure valve in the discharge line.

IMPORTANT: In the application where sulfuric acid, sulfuric acid based liquids, and other hazardous/corrosive liquids are being pumped, it is imperative that a back pressure valve be installed in the discharge line. The valve provides additional, redundant protection for the injection pump system AND the irrigation system should there be a failure of downstream component in the discharge line. With acids and other similar process fluids, the wear is accelerated on piping components, especially those that are interacting with irrigation water such as the injection quill. These components should be monitored and replaced regularly as well as safeguarded with additional protective devices such as back pressure valves.

NOTE: Because of the complexity and cost of this item, the back pressure valve is not a standard item supplied by Agri-Inject and must be special ordered.

Discharge Check Valve

The top check valve of the metering pump is designed to open on the discharge stroke, allowing liquid into the discharge line, and close on the suction stroke, preventing liquid in the discharge line from returning into the pump head. Normally, this is accomplished by means of gravity and line pressure pushing the check ball against the seat and closing the valve. On certain Agri-Inject pumps (mRoy A/P/B), a spring can be installed in the discharge check valve that applies pressure to the check ball, keeping it normally closed. This spring provides the benefit of positive guaranteed closure in slightly non-level conditions or with higher NPSH* situations. It ensures no potential backflow into the pumping head should downstream components fail. Also, it usually (depending on NPSH* conditions) assists with preventing siphoning from occuring into the irrigation pipeline.

IMPORTANT: In the application where sulfuric acid, sulfuric acid based liquids, and other hazardous/corrosive liquids are being pumped with an mRoy A/P/B series injection pump, it is recommended that a discharge check valve spring be installed in the discharge check valve. The spring, as stated above, provides additional, redundant protection for the injection pump system AND the irrigation system should there be a failure of any component in the discharge line. With acids and other similar process fluids, the wear is accelerated on piping components, especially those that are interacting with irrigation water such as the injection quill. These components, including this spring, should be monitored and replaced regularly as well as safeguarded with additional protective devices such as back pressure valves and discharge springs.

NOTE: The discharge check valve spring is not a standard item supplied by Agri-Inject and must be special ordered.

* NPSH stands for Net Positive Suction Head. In simple terms, this means the amount of pressure (ie. head) exterted by the suction fluid. This is normally caused by the level of the tank. The higher the tank level, the higher the pressure (normally - there could be circumstances where this isn't always the case, but in agricultural applications, generally speaking, the pressure in the outlet plumbing of a 6 ft. tall full tank is less than the pressure from a 12 ft tall full tank.)

Injection Check Valve (Mister Mist'r®)

The injection check valve distributes the process fluid (fertilizer/chemicals/etc.) within the irrigation pipeline. This valve must be normally closed (usually spring loaded) to keep irrigation water from entering the discharge line. It is very important that this valve be selected to be chemically compatible with the process fluid (including the body, spring, and seal). The valve should be properly sized for the irrigation pipeline (Note: Agri-Inject recommends a discharge point at or near the center of the irrigation pipeline for maximum mixing as well as safety with highly reactive fluids). The valve should be sized appropriately for the intended capacity of the injection pump (Note: A valve that is too small will generate high discharge hose pressures. A valve that is too big will not discharge optimally). The valve should be periodically maintained and replaced as necessary, and more frequently when pumping acids or other corrosive fluids.

NOTE: Please read the Back Pressure Valve section. It is critical in certain applications to have redundant protection beyond the injection check valve.

Bleeder Valve

The bleeder valve facilitates pump start up by allowing air to be purged from the discharge line. The bleeder valve has a discharge port that allows tubing (Classic: 0.1875" x 0.125" | Ultra: 0.250" x 0.150") so that the purged air/liquid can be directed to a safe container. The valve also allows pressure in the discharge line after shutdown to be dissipated so that piping disconnections can be made safely.

Shut Off Valves

There should always be shut off valves present in the suction line to allow disconnection of the hose from the tank. It is best practice to have a valve very near the output fitting of the tank. In fertilizer applications, it is also very common to have another valve at the end of the suction hose right before the quick connection into the pump. This allows the suction hose to remain full after disconnection rather than leak on the ground. There should also be a shut off valve directly upstream of the calibration tube. This, in conjunction with the tank shut off valve, allows isolation of the calibration tube to calibrate the injection pump. See the Notes section for calibration process instructions.

Important Notes

A **Calibration Column**
It is preferred that the top level of the calibration column is above the top liquid level of the tank, and critical that the cap of the column is vented. If the column is shorter than the top liquid level of the tank, extreme caution must be used to prevent calibration column overflow.

Calibration Process: (Note: Care should be used when handling chemicals/fertilizers)
With the Tank Shut-off Valve (#1) in the open position, slowly open the Calibration Shut-off Valve (#2) to allow the static pressure of the fluid in the tank to fill the calibration column. If the column height is shorter than the top liquid level of the tank, make sure to close the Calibration Column Shut-off Valve before it overflows. If there is not enough fluid in the tank to adequately fill the calibration column, it will be necessary to fill the column from the top with a smaller container of the process fluid. Once the column is full, ensure that the Tank Shut-off Valve (#1) is closed and the Calibration Column Shut-off Valve (#2) is open. At this point, the pump can be operated for a prescribed amount of time and the output of the pump can be measured via the drop in fluid in the calibration column. See the operator's manual for full instructions. This can be repeated as necessary until the pump is set to the proper rate. Once calibration is finished, ensure that the calibration column is empty and the Calibration Column Shut-off Valve (#2) is closed, and the Tank Shut-Off Valve (#1) is opened.

B **Strainer Size**
It is very important that the strainer size is as large or larger than the nominal size of the suction piping. The recommended mesh size of the strainer is 20 mesh with fertilizer applications and 40 mesh with chemigation applications. Note: With some chemicals such as fungicides, it may be necessary to remove the filter element to allow the chemical to move throught the filter body.

C **Suction Hose/Tubing Size**
It is critical that the size (ie. inner diameter) of the suction tubing is appropriate given the length of the tubing and the maximum capability of the pump. Consult the following table for minimum sizes at 10 ft. and 25 ft. distances.

Pump Capacity	Minimum size of Suction Tubing required at given length	
	10 ft.	25 ft.
1.6 gph and lower	0.375 in.	0.375 in.
1.6 to 11 gph	0.375 in.	0.50 in.
11 gph to 18 gph	0.50 in.	1.00 in.
18 gph to 30 gph	1.00 in.	1.25 in.
30 gph to 55 gph	1.25 in.	1.50 in.
55 gph to 85 gph	1.25 in.	2.00 in.
85 gph to 110 gph	1.50 in.	2.00 in
110 gph to 170 gph	2.00 in.	3.00 in.
170 gph to 310 gph	2.00 in.	4.00 in.

D **Discharge Check Valve Spring Option**
All mRoy A/P/B pumps have the option of the installation of a spring in the discharge valve. This spring holds the ball closed until overcome by the pressure generated by the pump during it's discharge stroke. The spring provides added protection against siphoning from the tank into a non-pressurized pipe. This option is recommended for all sulfuric acid applications. This is not a standard item in the product selection table and must be ordered separately.

E **Back Pressure Valve**
Back Pressure Valves are not standard equipment on Agri-Inject systems. They are highly recommended to be installed in applications where acids or other potentially dangerous liquids are being pumped. This valve provides additional, redundant safeguarding for protection against unintended flow of either process fluid or irrigation water.

F **Discharge from Bleeder Valve**
When utilizing the Bleeder Valve either in priming or pressure relief, it is important that the discharged liquid be captured and contained so as to eliminate any waste or environmental impact.

13.0 END USER WARRANTY

The warranty obligations of AGRI-INJECT for this product are limited to the terms set forth below:

1.0 What is Covered
This Limited Warranty covers defects in materials and workmanship for AGRI-INJECT branded products purchased in the United States of America, when delivered in new condition in their original packaging. This Limited Warranty covers defects encountered only in normal, intended use of the product, under the ownership of the original buyer.

2.0 What is Not Covered
This Limited Warranty does not apply to the following cases: (1) Loss of or damage to AGRI-INJECT product due to abuse, mishandling, or improper packaging by buyer; (2) Failure to follow operating, maintenance, or environmental instructions prescribed in AGRI-INJECT's instruction manual and other operating guidelines; (3) Products not used for their intended purpose or used outside of "normal in the industry" practices; (4) Alterations to the product, purposeful or accidental, including attempted repair of an item that results in damage; (5) Electrical current fluctuations or any application where the Agri-Inject system is connected to a power source being supplied via a Rotary Phase Generator; (6) Corrosion due to aggressive materials not approved for your specific product; (7) Mishandling or misapplication of AGRI-INJECT product; (8) Products or parts that are typically consumed/worn during normal operation; (9) Use of parts or supplies (other than those sold by AGRI-INJECT) which cause damage to the products, or cause abnormally frequent service calls or service problems; (10) Exposure to excess moisture, heat, dust, and/or corrosive conditions; (11) Damage from Acts of God (fire, smoke, flood, lightning, etc), acts of terrorism, or negligence; (12) Display units, demonstration units, or free goods; (13) Merchandise obtained other than through an Authorized Dealer or Agri-Inject directly including merchandise purchased at auction or third party liquidation, or if the product has been obtained illegally or surreptitiously, or if the product is involved in bankruptcy sale/proceeding; (14) Products where the serial number designation is missing or unreadable; and (15) Systems/components that are returned in an unassembled condition. Items and component parts not manufactured by AGRI-INJECT (including, but not limited to, electric motors, metering pumps, electric control components and other devices), even if purchased from an authorized AGRI-INJECT dealer or customer, are not covered by this Limited Warranty. As such, AGRI-INJECT in no way warrants any defects or workmanship in individual component parts utilized in any of its products provided said components are assembled properly by AGRI-INJECT. All such items and component parts manufactured by third-party manufacturers shall be covered solely by said third-party manufacturer's warranty. AGRI-INJECT, will, however, assist dealers and customers in pursuing coverage under the appropriate third-party manufacturer's warranty. AGRI-INJECT maintains a database of all component parts, their respective manufacturers and warranty terms which it will provide to dealers and customers upon request. The following list provides a summary of negotiated manufacturer's warranties for commonly used component parts: Milton Roy mRoy A/P/B Metering Pumps (Drive end: 5 years, Liquid end: 1 year, Motor: per motor manufacturer warranty); Milton Roy MacRoy Series G Metering Pumps (Drive end: 5 years, Liquid end: 1 year, Motor: per motor manufacturer warranty); Milton Roy MacRoy Series D Metering Pumps (Drive end: 3 years, Liquid end: 1 year, Motor: per motor manufacturer warranty); LMI Metering Pump "FIG" (3 years); Leeson Electric Motors (1 year); Most electric/electronic components -VFD, HMI, PLC, Power Supplies, Etc (1 year). Note: "Drive end" is defined as the gearbox type assembly that exists between the electric motor and the liquid end. "Liquid end" is defined as any component of the pump itself (not the connected plumbing) that touches the process fluid. This includes the pump head, check valves, diaphragm assembly, and, on MacRoy G and D pumps, the oil seal assembly.

3.0 How Long this Coverage Lasts
The standard limited warranty periods for AGRI-INJECT products are as follows: 882 - Fertigation Systems* (3 years); 883 - Reflex Systems* (3 years); 887 - Insectigator Systems* (3 years); 888 - Chemigation Systems* (3 years); 889 - Large Capacity Systems* (3 years); All other systems, custom and otherwise, includes BoundaryRider

(1 year); 820/821 - Mister Mist'r and Bleeder related items ** (1 year); Fabricated components (1 year); Singularly purchased molded items or assemblies (1 year). The start of the warranty period is defined as the date on which the product was sold to the end user, unless that cannot be properly determined, at which point it is the date on which the product was sold to the dealer. It is important that the end user register their AGRI-INJECT product to ensure accurate recording of this date by completion of the Warranty Activation Card.

4.0 Who is Covered

Only the original end user of this product is covered under this limited warranty. This limited warranty is not transferable to subsequent purchasers or owners of this product.

5.0 What AGRI-INJECT Will Do

AGRI-INJECT will, at its sole option, provide one of the following two remedies to whatever extent it shall deem necessary to satisfy a proper claim under this limited warranty:

1. Elect to repair or facilitate the repair of any defective parts within a reasonable period of time, free of any charge for the necessary parts and labor to complete the repair and restore this product to its proper operating condition.
2. Replace this product with a direct replacement or with a similar product deemed by AGRI-INJECT to perform substantially the same function as the original product AGRI-INJECT will deliver repaired products or replacements for defective products to the buyer (ground freight prepaid) to the destination provided in the original order. Products returned to AGRI-INJECT for which AGRI-INJECT provides replacement under this warranty shall become the property of AGRI-INJECT.

6.0 What AGRI-INJECT Will Not Do Under This Limited Warranty

If this product is returned to AGRI-INJECT or the authorized dealer from which it was purchased or any other party authorized to repair AGRI-INJECT products, this product must be insured during shipment, with the insurance and shipping charges prepaid by the Buyer. If this product is returned uninsured, the Buyer assumes all risks of loss or damage during shipment. AGRI-INJECT will not be responsible for any costs related to the removal or re-installation of this product from or into any installation. AGRI-INJECT will not be responsible for any costs related to any setting up this product. A new warranty period shall not be established for repaired or replaced material, products, or supplied. Such items shall remain under warranty only for the remainder of the warranty period on the original materials, products, or supplies. In the event that the equipment is altered or repaired by the buyer without prior written approval by AGRI-INJECT, all warranties are void. Damage caused by equipment or accessories not manufactured by AGRI-INJECT may void the product's warranty.

7.0 How to Obtain a Remedy Under This Limited Warranty

To obtain a remedy under this Limited Warranty, the original end user must give AGRI-INJECT prompt notice of any defect or failure and satisfactory proof thereof. Any defective parts must be returned to the AGRI-INJECT factory or to an authorized service center for inspection. The Buyer shall prepay all freight charges to return any product to AGRI-INJECT factory, or to another repair facility designated by AGRI-INJECT. In order to pursue any remedy under this Limited Warranty, you must possess an original, dated receipt as proof of purchase from an authorized AGRI-INJECT dealer. You may also be directed to an authorized reseller or a person authorized by AGRI-INJECT to repair the product, or to the original manufacturer in the event of a defect not covered by this Limited Warranty as specified above. If it is decided that this product should be returned directly to AGRI-INJECT, this product should be properly packed, preferably in the original carton, for shipping and bear the proper reference marking number on the outside of the package per the Warranty Evaluation process. Any package not bearing the proper markings may be refused. Please call the Agri-Inject dealer or our factory direct to inititate the Warranty Evaluation process.

8.0 Limitation of Liability

THE MAXIMUM LIABILITY OF AGRI-INJECT UNDER THIS LIMITED WARRANTY SHALL NOT EXCEED THE ACTUAL PURCHASE PRICE PAID FOR THE PRODUCT. TO THE MAXIMUM EXTENT PERMITTED BY LAW, AGRI-INJECT SHALL NOT BE LIABLE FOR LOSS OF REVENUES OR PROFITS, OR INCONVENIENCES, EXPENSE FOR SUBSTITUTE EQUIPMENT OR SERVICE, STORAGE CHARGES, LOSS OF DATA, OR ANY OTHER SPECIAL, INCIDENTAL, OR CONSEQUENTIAL DAMAGE CAUSED BY THE USE OR MISUSE OF, OR

INABILITY TO USE THE PRODUCTS, REGARDLESS OF THE LEGAL THEORY ON WHICH THE CLAIM IS BASED, AND EVEN IF AGRI-INJECT HAS BEEN ADVISED OF THE POSSIBILITY OF SUCH DAMAGES.
Some countries, districts or states do not allow the exclusion or limitation of relief, special, incidental, consequential or indirect damages, or the limitation of liability to specified amounts, so the above limitations or exclusions may not apply to you.

9.0 Exclusive Remedy

TO THE MAXIMUM EXTENT PERMITTED BY LAW, THIS LIMITED WARRANTY AND THE REMEDIES SET FORTH ABOVE ARE EXCLUSIVE AND IN LIEU OF ALL OTHER WARRANTIES, REMEDIES AND CONDITIONS, WHETHER ORAL OR WRITTEN, EXPRESS OR IMPLIED. TO THE MAXIMUM EXTENT PERMITTED BY LAW, AGRI-INJECT SPECIFICALLY DISCLAIMS ANY AND ALL IMPLIED WARRANTIES, INCLUDING, WITHOUT LIMITATION, WARRANTIES OF MERCHANTABILITY AND FITNESS FOR A PARTICULAR PURPOSE. IF AGRI-INJECT CANNOT LAWFULLY DISCLAIM OR EXCLUDE IMPLIED WARRANTIES UNDER APPLICABLE LAW, THEN ALL IMPLIED WARRANTIES COVERING THIS PRODUCT, INCLUDING WARRANTIES OF MERCHANTABILITY AND FITNESS FOR A PARTICULAR PURPOSE,

SHALL APPLY TO THIS PRODUCT AS PROVIDED UNDER APPLICABLE LAW. IF ANY PRODUCT TO WHICH THIS LIMITED WARRANTY APPLIES IS A “CONSUMER PRODUCT” UNDER THE MAGNUSON-MOSS WARRANTY ACT (15 U.S.C.A. §2301, ET SEQ.) OR OTHER APPLICABLE LAW, THE FOREGOING DISCLAIMER OF IMPLIED WARRANTIES SHALL NOT APPLY TO YOU, AND ALL IMPLIED WARRANTIES

ON THIS PRODUCT, INCLUDING WARRANTIES OF MERCHANTABILITY AND FITNESS FOR THE PARTICULAR PURPOSE, SHALL APPLY AS PROVIDED UNDER APPLICABLE LAW.

10.0 Other Conditions

This Limited Warranty gives you specific legal rights, and you may have other rights which vary from country to country or state to state. This limited warranty is void if (i) the label bearing the serial number of this product has been removed or defaced; (ii) the product is not distributed by AGRI-INJECT; or (iii) this product is not purchased from an authorized AGRI-INJECT reseller. If you are unsure whether a reseller is an authorized AGRI-INJECT reseller, visit our web site at www.agri-inject.com or contact AGRI-INJECT directly. Thank you for purchasing an AGRI-INJECT product. We hope it will give you years of satisfaction.

AGRI-INJECT®

Because irrigation can deliver more than just water ®

Agri-Inject, Inc.
5500 US Highway 34
PO Box 437
Yuma, CO 80759 USA

Telephone (international): +1 970-848-5336
Telephone (toll free): 1-800-446-5328
Fax number (international): +1 970-848-5338
Fax number (toll free): 1-888-846-5328

Web: www.agri-inject.com
Email: info@agri-inject.com
Facebook: facebook.com/agriinject
Twitter: @agriinject
YouTube: youtube.com/agriinjectinc

ALL AGRI-INJECT PRODUCTS ARE ASSEMBLED IN THE UNITED STATES OF AMERICA

We take pride in the quality of our products,
and the the countless configurations we provide!

Here are nine of our most popular:

Fertigation Pump System
mRoy A 30 GPH Complete
882-34-111030-0

Fertigation Pump System
MacRoy D 50 GPH Complete
882-34-111050-0

Fertigation Pump System
MacRoy G 150 GPH Complete
882-34-114150-0

Insectigator®
20 gal, Mixer, 1.9 GPH Fig Pump
887-34-212902-0

Insectigator®
30 gal, Mixer, 1.9 GPH Fig Pump
887-34-312902-0

Reflex Connect®
Verizon, MacRoy G 110 GPH
883-14-222116-0

Standard Chemigation System
110 gal, mRoy P 11 GPH, Complete
888-34-112011-0

Standard Chemigation System
200 gal, mRoy A 30 GPH, Complete
888-34-212030-0

Large Capacity Chemigation System
400 gal, MacRoy G 55 GPH, Complete
889-34-412055-0

AGRI-INJECT

Because irrigation can deliver more than just water

Contact Information

PHONE

INTERNATIONAL
+1 970-848-5336

TOLL FREE
1-800-446-5328

FAX

INTERNATIONAL
+1 970-848-5338

TOLL FREE
1-888-846-5328

agri-inject.com

info@agri-inject.com

Agri-Inject, Inc.

5500 US HIGHWAY 34
PO BOX 437
YUMA, CO 80759 USA